CROWDER SUPPLY CO, INC. - 8495 ROSLYN ST. - COMMERCE CITY, CO 80022 - TOLL FREE 888-883-5144 - www.crowdersupply.com

KENT
AIR TOOL CO.
711 Lake St. - KENT, OHIO 44240

GARDNER-DENVER MODEL DH143 & PR143 DRIFTER

REPLACEMENT Katco SERVICE PARTS

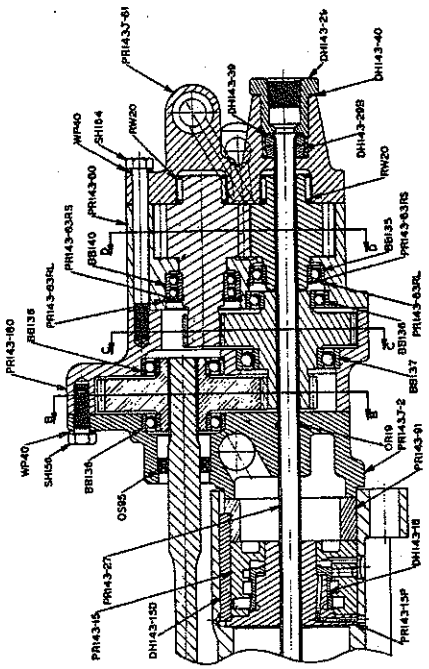
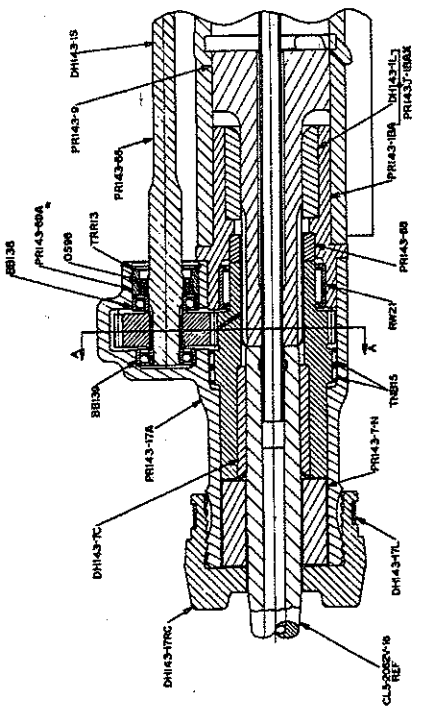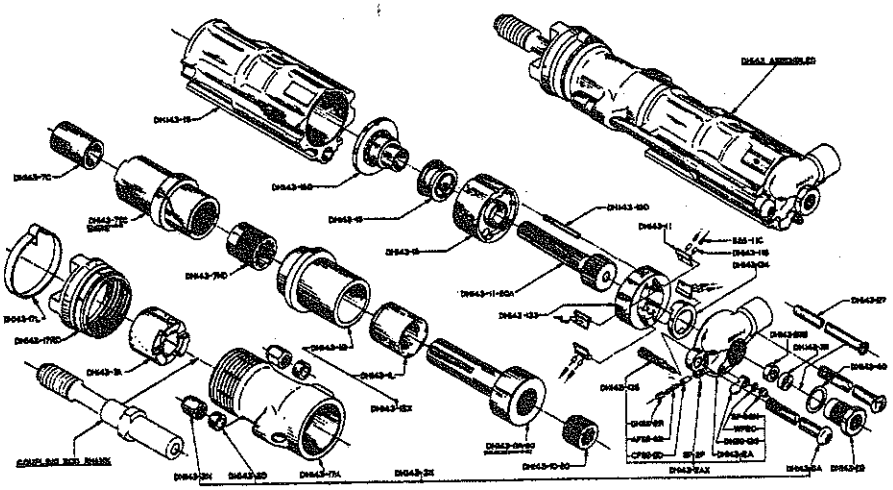
PART NO.	REF. NO.	NAME OF PART
DH143-3D	6282	Side Rod Spacer
DH143-7C	6294	Chuck Driver Bushing
DH143-9A	6296	Hammer
DH143-11-50A	6298	Rifle Bar
S55-11C	473	Pawl Spring
DH143-29	6291	Air or Water Gland
OR23	1171	Blowing Swivel "O" Ring
DH143-134	6287	Pawl Lifter
DH143-135	6286	Rotation Control Shaft
DH143-11	1646	Pawl