CROWDER SUPPLY CO, INC.- 8495 ROSLYN ST.- COMMERCE CITY, CO 80022 - TOLL FREE 888-883-5144 - www.crowdersupply.com

EXPLODED VIEW OF CP 4181 PULER
CP 4181 PUSER

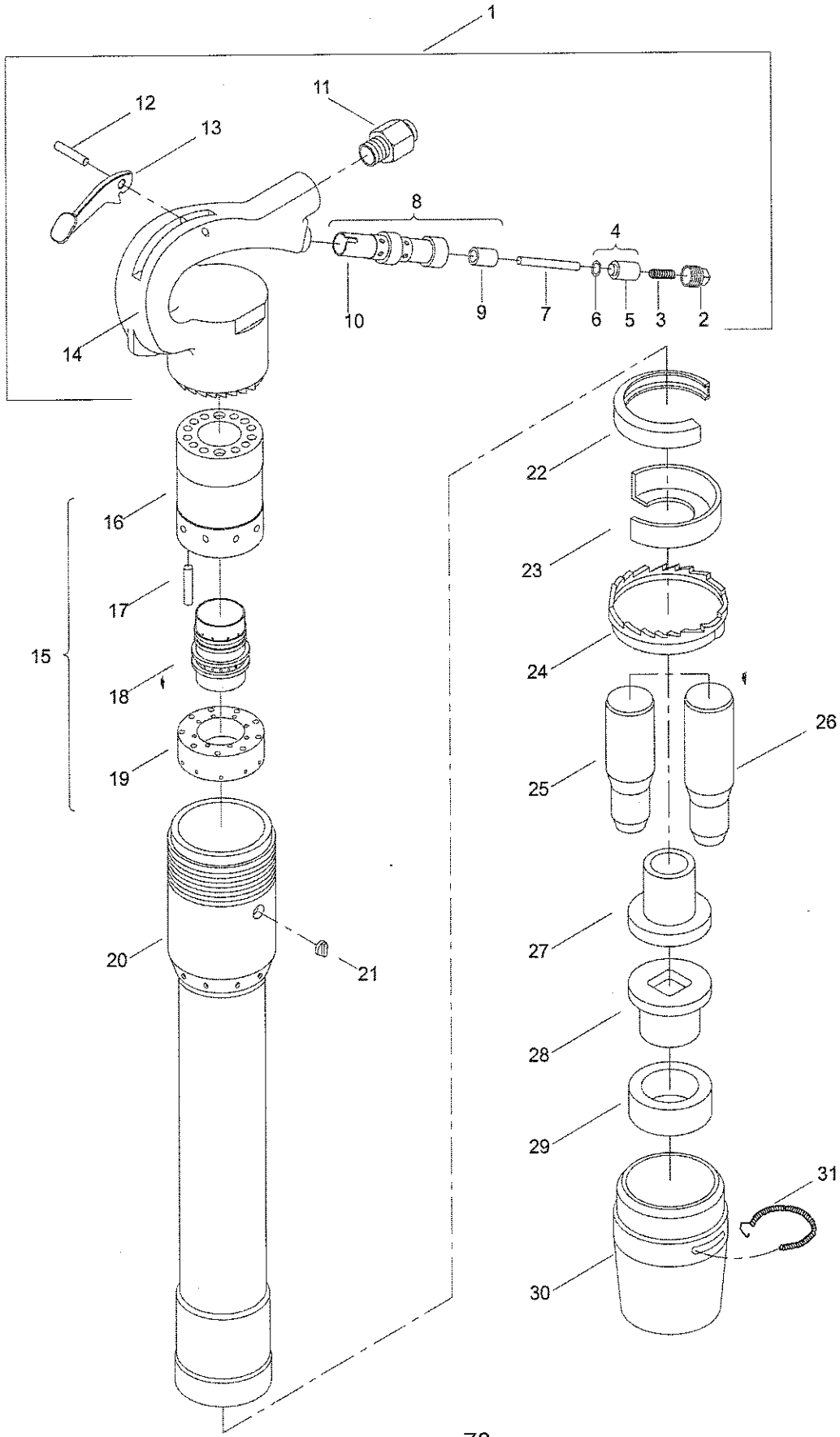

CROWDER SUPPLY CO, INC.- 8495 ROSLYN ST.- COMMERCE CITY, CO 80022 - TOLL FREE 888-883-5144 - www.crowdersupply.com

Ref. No.	Ordering No.	Qty.	Description
CP 4181 (PULER, PUSER)			
1	P007164	1	Handle complete (Includes item No. 2, 3, 5, 6, 7, 9, 10, 11, 12, 13 & 14)
2	P001873	1	Plug - Valve tube
3	P001853	1	Spring - Valve
4	P001799	1	Valve - Throttle (Includes item No. 5 & 6)
5			Valve - Throttle
6	P083071	1	O-ring
7	P004834	1	Pin - Push (Valve)
8	P007325	1	Tube - Throttle (Includes item No. 9 & 10)
9	P004839	1	Bushing
10		1	Tube - Throttle
11	P001983	1	Bushing - Air inlet (3/8"NPTF)
12	P001915	1	Pin - Lever
13	P001982	1	Lever - Throttle
14		1	Handle (Includes item No. 8)
15	P007385	1	Valve complete (Includes item No. 16, 17, 18 & 19)
16	P006319	1	Case - Valve
17	3303 0050 86	1	Dowel
18	P001538	1	Valve
19	P006320	1	Lid - Valve case
20		1	Cylinder
21	P001430	1	Key - Lock collar
22	P001355	1	Clip - Spring (Lock collar)
23	P001389	1	Deflector - Exhaust
24	P001399	1	Collar - Lock
25	R157982	1	Piston (8" Stroke)
26	R157981	1	Piston (11" Stroke)
27	P156988	1	Sleeve - Upper
28	P072333	1	Sleeve - Lower
29	3303 0051 03	1	Bumper
30	P071849	1	Sleeve - Retainer
31	P073942	1	Spring - Lock