Parts Breakdown

Buttons link each numbered part to its product page. Full parts list follows the drawing.

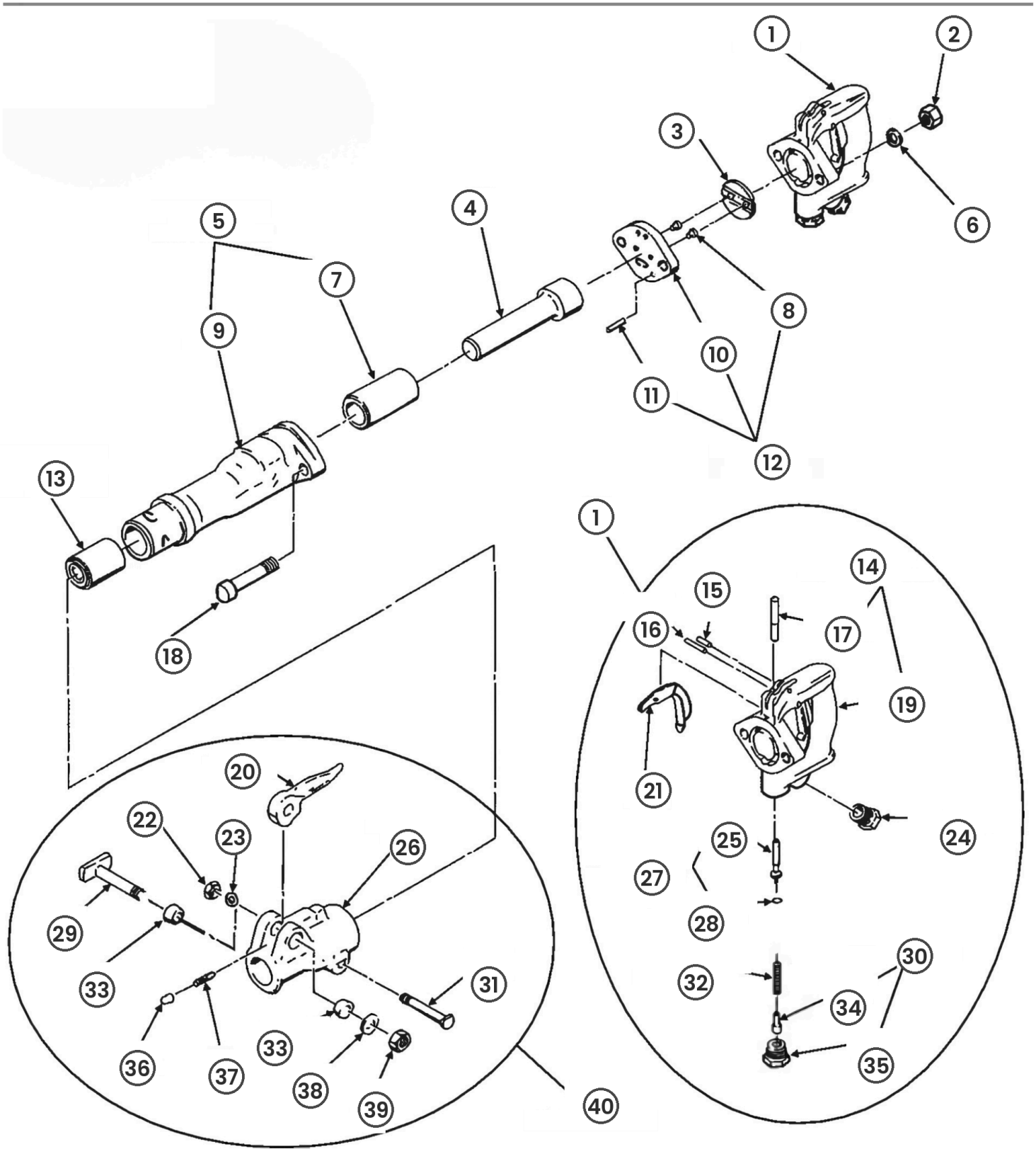

Parts list

Old numbers are APT's former part numbers; both find the part on crowdersupply.com.

Parts (drawing on page 1)

REF	APT PART NO.	OLD NO.	DESCRIPTION	PRICE
1	1280583559	07529	Handle Kit	$957
2	1280583120	00706	Nut - Hex	$9
3	1280583590	08825	Automatic Valve	$226
4	1280583111	06533	Piston	$401
5	1280583169	07451	Cylinder Assembly	$1,752
6	1280583475	00233	Lock Washer	$8
7	1280583480	02344	Cylinder Bushing	$125
8	1280582563	01236	Valve Pin	$75
9	1280583092	03118	Cylinder, M125	$619
10	1280582742	04880	Front Valve Chest	$116
11	1280582562	01235	Roll Pin	$52
12	1280583170	00751	Valve Chest Assembly	$173
13	1280583572	00785	Bushing - 7/8 x 3-1/4" Hex	$180
14	1280583155	07294	Handle Sub-Assembly	$734
15	1280583812	00274	Roll Pin	$8
16	1280583090	00307	Roll Pin	$8
17	1280583479	02342	Bushing - Bronze	$85
18	1280582601	01612	Bolt - 9/16-18 UNF	$13
19	1280583792	02495	Handle, M125, Not For Sale	$259
20	1280583597	00893	Steel Retainer	$91
21	1280583478	02341	Throttle Lever	$99
22	1280583476	02332	Stop Nut	$8
23	1280582555	00120	Lock Washer	$8
24	1280582992	18651	Inlet Bushing - 1/2 x 1/2	$14
25	1280582373	18561	Throttle Valve	$19
26	1280583093	03123	Retainer Housing	$484
27	1280582372	18560	Throttle Valve Assembly	$144
28	1280583563	07647	O-Ring - Seal #2-205	$8
29	1280582798	06334	Steel Retainer Bolt	$42
30	1280583477	02336	Throttle Valve Plug Assembly	$111
31	1280583094	03134	Steel Retainer Bolt	$11
32	1280583566	00772	Throttle Valve Spring	$8
33	1280582797	06331	Cone Washer	$10
34	1280582747	05580	Throttle Valve Pin	$63
35	1280582746	05579	Plug	$83
36	1280583451	00207	Retainer Plunger	$16
37	1280583079	02949	Spring - .465" Dia x 1.25" Long	$19
38	1280582799	06335	Washer	$8
39	1280583453	00208	Insert Nut - Nylon	$8
40	1280583098	03143	Retainer Housing Assembly	$647

Kits and accessories

REF	APT PART NO.	OLD NO.	DESCRIPTION	PRICE
	1280583427	18295	Latch Kit - M117, M118, M119, M125	$157
	1280582720	18790	18790 O-ring seal & repair Kit - M125	$16
	1280582367	18504	Universal Coupler, 1/2" Male	$29

Tool

REF	APT PART NO.	OLD NO.	DESCRIPTION	PRICE
	1280583346	05211	APT 125 Clay Digger, Parts Breakdown	$1,311