Parts Breakdown

Buttons link each numbered part to its product page. Full parts list follows the drawing.

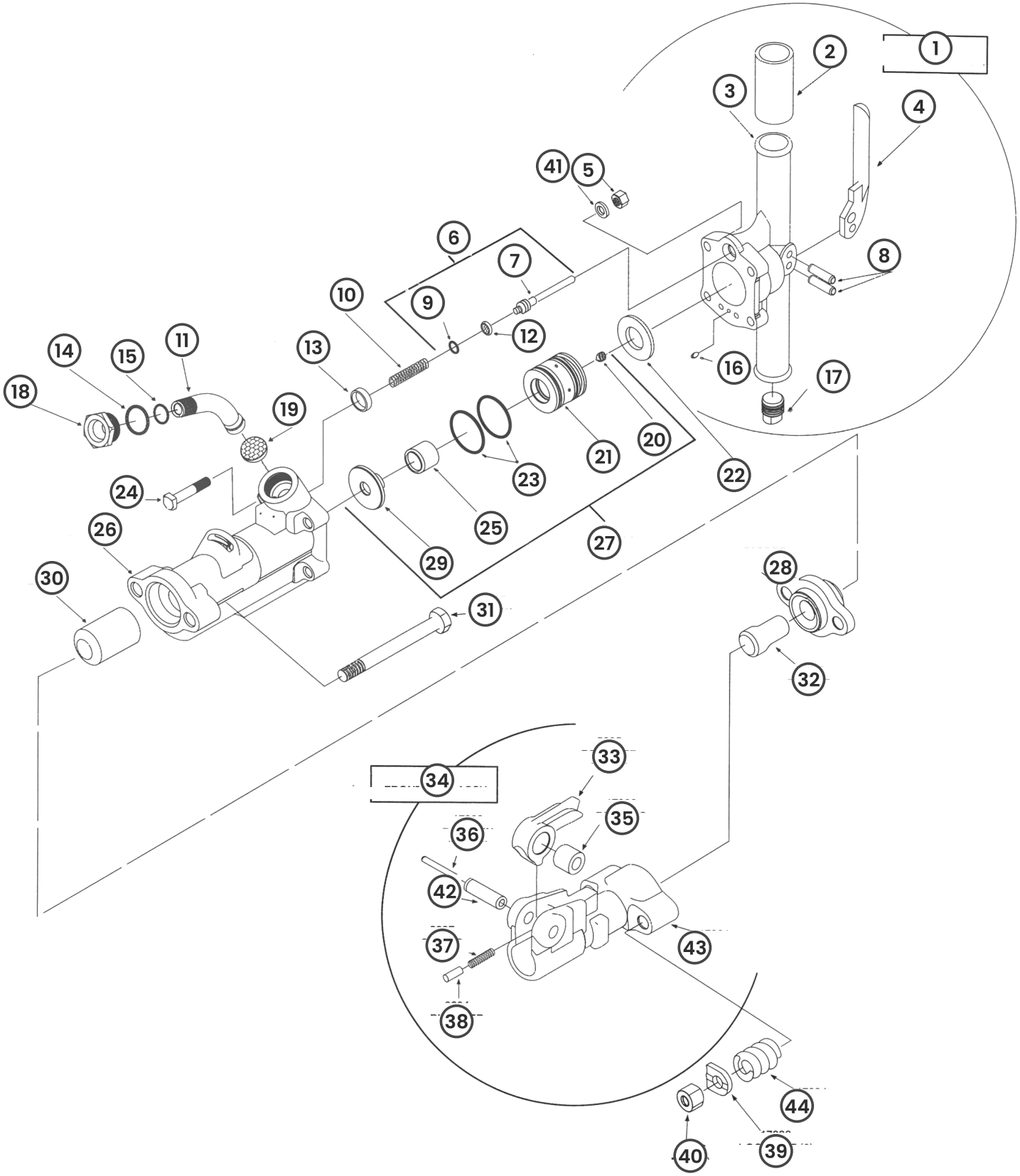

Drawing and part numbers: American Pneumatic Tools. Prices as of Oct 19, 2026; current prices on each part's page.

Parts list

Old numbers are APT's former part numbers; both find the part on crowdersupply.com.

Parts (drawing on page 1)

REF	APT PART NO.	OLD NO.	DESCRIPTION	PRICE
1	1280582654	17939	Back Head Assembly	$399
2	1280582672	17958	Handle Grip, M140	$18
3	1280582657	17942	Back Head	$701
4	1280582655	17940	Throttle Lever	$114
5	1280582669	17955	Back Head Nut	$9
6	1280583529	03508	Throttle Valve Assembly	$130
7	—	03528	Throttle Valve old number; no current APT number	Quote
8	1280582578	01380	Roll Pin	$9
9	1280583504	03225	Retaining Ring	$9
10	1280582782	00598	Spring	$24
11	1280582665	17951	Air Inlet Swivel	$159
12	1280583503	03224	Throttle Valve Seal	$20
13	1280582664	17950	Cylinder Seal	$21
14	1280582895	10081	O-Ring Seal - #2-124	$8
15	1280583473	02225	O-Ring - Seal #2-019	$7
16	1280582676	17975	Oil Plug	$56
17	1280583502	03215	Oil Plug	$16
18	1280582659	17944	Air Inlet Swivel Nut	$142
19	1280582626	00178	Air Inlet Screen	$12
20	1280582909	00111	Pressure Plug - Dry Seal	$8
21	1280582642	17925	Valve Case	$398
22	1280582645	17928	Valve Case Spacer	$35
23	1280582671	17957	O-Ring - Seal #2-137	$9
24	1280582663	17949	Back Head Bolt	$60
25	1280582644	17927	Valve	$133
26	1280582666	17952	Cylinder, M140	$869
27	1280582641	17924	Valve Case Assembly	$795
28	1280582661	17946	Anvil Block Bushing	$359
29	1280582643	17926	Valve Case Cover	$119
30	1280582662	17948	Piston, M140	$193
31	1280582650	17935	Front Head Bolt	$108
32	1280582660	17945	Tappet	$114
33	1280582790	06235	Steel Retainer	$183
34	—	17929	Part 17929 old number; no current APT number	Quote
35	1280582646	17930	Latch Bushing	$57
36	1280582653	17938	Inner Latch Retainer Pin	$14
37	1280583048	02897	Plunger Spring	$11
38	1280582794	06284	Latch Plunger	$37
39	1280582648	17933	Locknut Washer	$27
40	1280582651	17936	Side Rod Nut	$28
41	1280582668	17954	Lock Washer	$8
42	1280582652	17937	Outer Latch Retainer Pin	$23
43	—	17931	Front Head old number; no current APT number	Quote
44	1280582649	17934	Front Head Spring	$82