Parts Breakdown

Buttons link each numbered part to its product page. Full parts list follows the drawing.

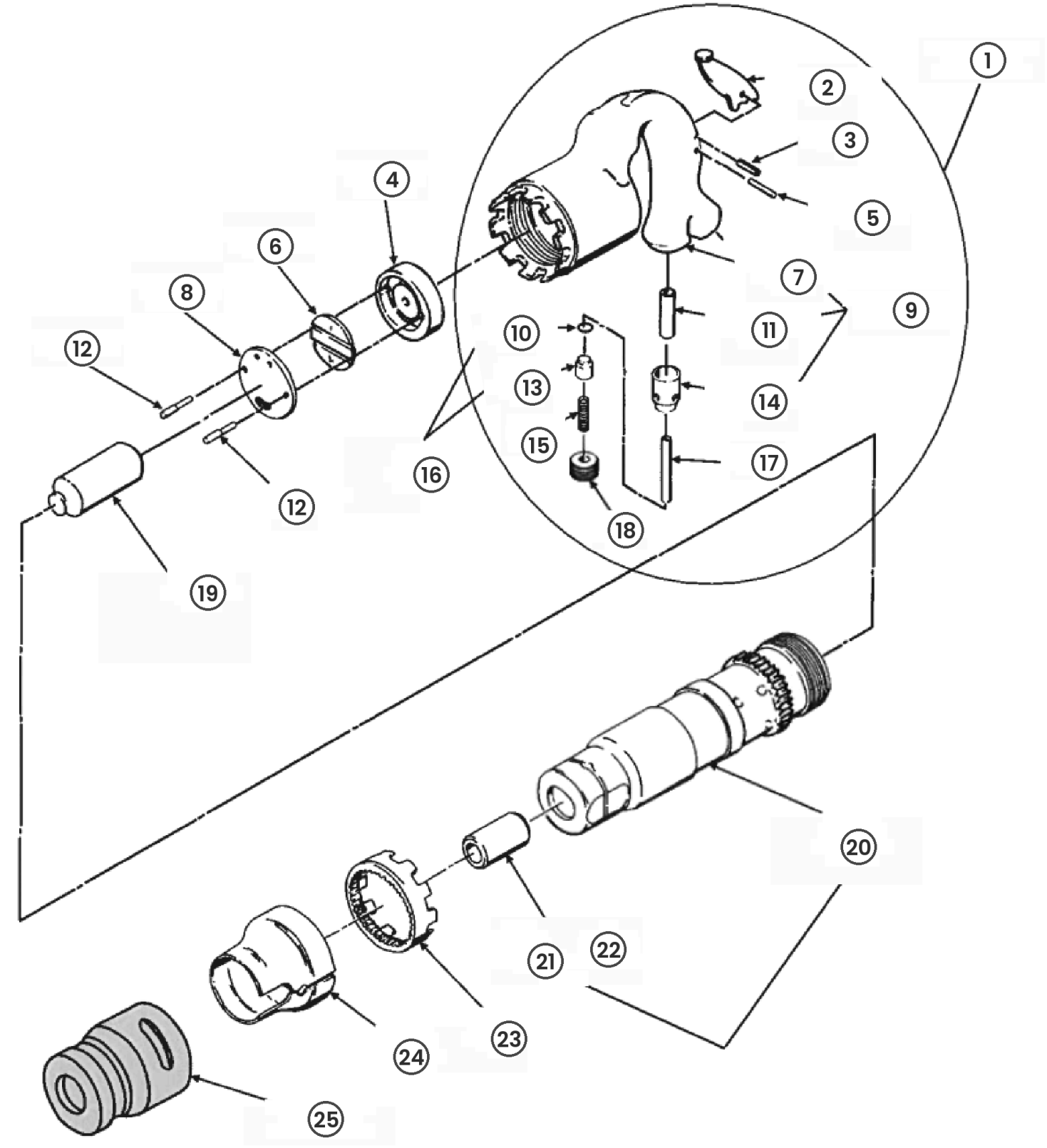

Parts list

Old numbers are APT's former part numbers; both find the part on crowdersupply.com.

Parts (drawing on page 1)

REF	APT PART NO.	OLD NO.	DESCRIPTION	PRICE
1	1280582297	01735	Pistol Grip Handle Assembly	$701
2	1280583578	00802	Throttle Lever	$86
3	1280583089	00306	Roll Pin	$8
4	1280583472	02221	Rear Valve Chest	$124
5	1280583109	00651	Roll Pin	$8
6	1280583117	00699	Automatic Valve	$114
7	1280583786	02476	Handle M650S	$325
8	1280582561	01233	Front Valve Chest	$180
9	1280583598	08966	Pistol Grip Handle Sub-Assembly	$539
10	1280582637	01786	O-Ring Seal, #2-010	$7
11	1280583571	00781	Brass Bushing	$24
12	1280583168	00744	Pin	$20
13	1280583787	02477	Throttle Valve	$43
14	1280582628	01783	Throttle Valve Bushing	$65
15	1280583430	01918	Throttle Valve Spring	$7
16	1280582627	01782	Throttle Valve Assembly	$47
17	1280583437	01947	Throttle Valve Push Pin	$21
18	1280583436	01945	Pipe Plug	$9
19	1280582595	01533	Piston, (m262, M452, M652)	$81
20	1280583095	03137	Cylinder 2" M652	$325
21	1280583810	00272	Cylinder Bushing - Round	$35
22	1280583811	00273	Cylinder Bushing - Hex	$43
23	1280582560	01231	Lock Ring	$106
24	1280582629	01785	Exhaust Deflector	$63
25	1280583118	07022	Retainer - Oval Collar	$105

Kits and accessories

REF	APT PART NO.	OLD NO.	DESCRIPTION	PRICE
	1280582716	18786	O-Ring & Seal Repair Kit	$17
	1280583527	03486	Swivel Ass'y - 1/2" NPT X 1/2" HB	$49
	1280583521	03389	Swivel Assembly - 3/8 NPT	$170
	1280583520	03388	Air Inlet Swivel - 1/2" Hose Barb	$48
	1280583807	02698	Air Inlet Swivel - 3/8" Male NPT	$89
	1280583435	01941	Lock Spring - Chipping Hammer Retainer	$8
	1280583611	9431	Retainer - Oval Collar	$109
	1280582745	05550	Quick Change Retainer & Spring	$251
	1280583424	18290	Ball Retainer Ass'y	$271
	9753300015		Retrofit Dust Suppression Spray Kit - 36"	$177

Tool

REF	APT PART NO.	OLD NO.	DESCRIPTION	PRICE
	1280582858	05298	APT 652 Chipping Hammer, Parts Breakdown	$678
	1280582861	05299	APT 652 Chipping Hammer, Parts Breakdown	$678