Parts Breakdown

Buttons link each numbered part to its product page. Full parts list follows the drawing.

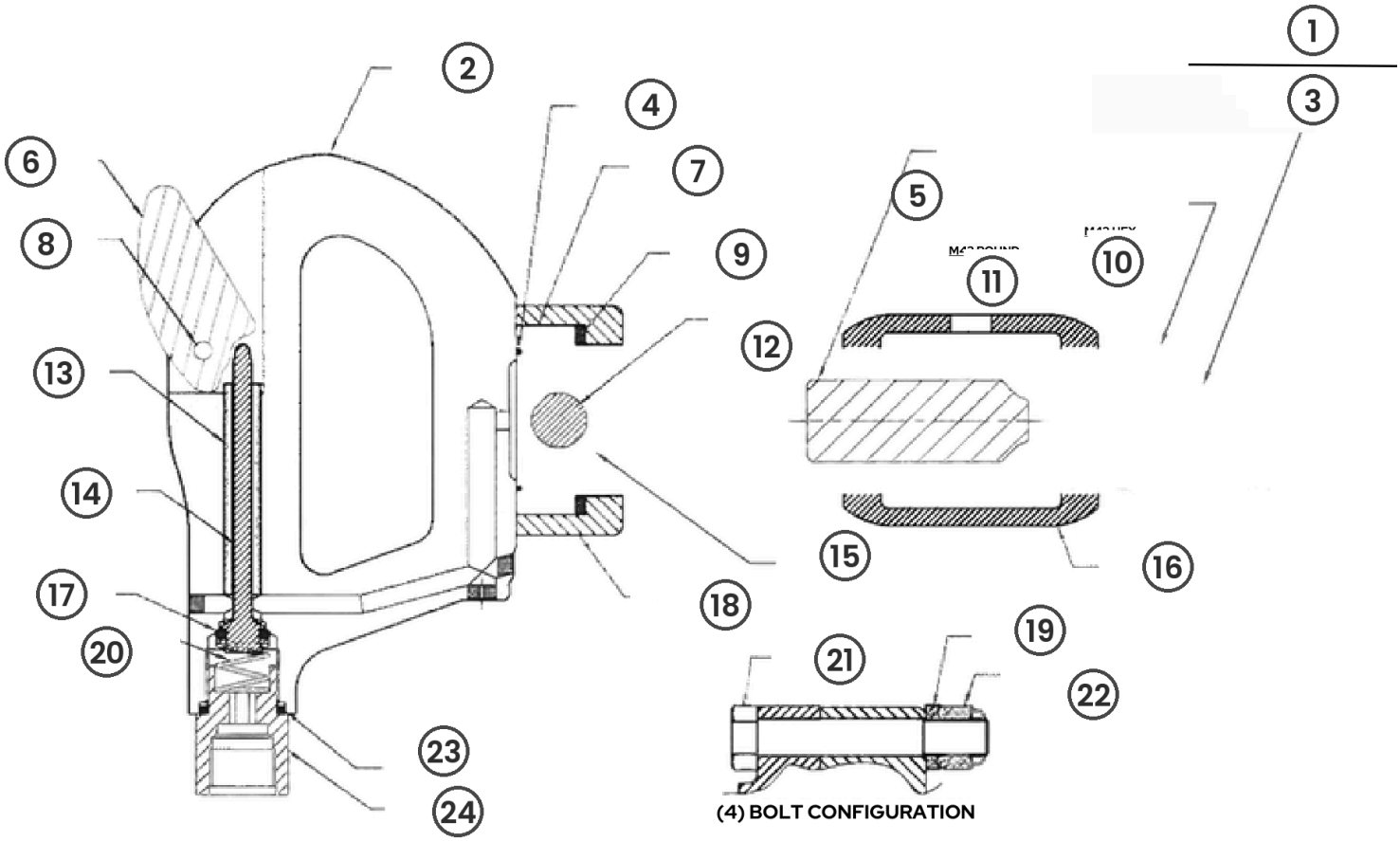

Drawing and part numbers: American Pneumatic Tools. Prices as of Oct 19, 2026; current prices on each part's page.

Parts list

Old numbers are APT's former part numbers; both find the part on crowdersupply.com.

Parts (drawing on page 1)

REF	APT PART NO.	OLD NO.	DESCRIPTION	PRICE
1	1280583810	00272	Cylinder Bushing - Round	$35
2	1280583196	18862	Handle, 4BCH	$598
3	1280583811	00273	Cylinder Bushing - Hex	$43
4	1280583445	01984	O-Ring Seal - #2-224	$8
5	1280582596	01534	Piston - M263, M453, M653	$85
6	1280583207	18864	Trigger, 4BCH	$38
7	1280583017	18693	Upper Valve Case	$60
8	1280583206	18863	Roll Pin, 4BCH	$8
9	1280583015	18691	Ring - Nylon	$10
10	1280583003	18676	Cylinder Assembly - 3" Hex	$541
11	1280583001	18673	Cylinder Assembly	$503
12	1280583009	18684	Ball - 3/4" Dia	$40
13	1280583201	18865	Bushing, 4BCH	$18
14	1280583197	18857	Throttle Valve	$21
15	1280583016	18692	Lower Valve Case	$22
16	1280582687	18742	Exhaust Deflector	$24
17	1280583563	07647	O-Ring - Seal #2-205	$8
18	1280583200	18861	Collar, 4BCH	$204
19	1280582555	00120	Lock Washer	$8
20	1280583010	18685	Spring	$8
21	1280583202	18866	Bolt, 4BCH	$8
22	1280583204	18868	Nut, 4BCH	$8
23	1280583199	18860	O-Ring Seal	$8
24	1280583198	18859	Inlet Bushing	$24

Kits and accessories

REF	APT PART NO.	OLD NO.	DESCRIPTION	PRICE
	1280583520	03388	Air Inlet Swivel - 1/2" Hose Barb	$48
	1280583807	02698	Air Inlet Swivel - 3/8" Male NPT	$89
	1280583561		Air Inlet Bushing - 7/8-24 Male x 3/8" Female	$16
	1280583046		Screened Reducing Bushing - 3/8" Male x 3/8" Female	$137
	1280583435	01941	Lock Spring - Chipping Hammer Retainer	$8
	1280583611	9431	Retainer - Oval Collar	$109
	1280582745	05550	Quick Change Retainer & Spring	$251
	1280583424	18290	Ball Retainer Ass'y	$271

Tool

REF	APT PART NO.	OLD NO.	DESCRIPTION	PRICE
	1280583192	18850	APT M43 4-Bolt Chipping Hammer, Parts Breakdown	$678
	1280583193	18851	APT M43 4-Bolt Chipping Hammer, Parts Breakdown	$678