SERVICE DATA

Assembly instruction

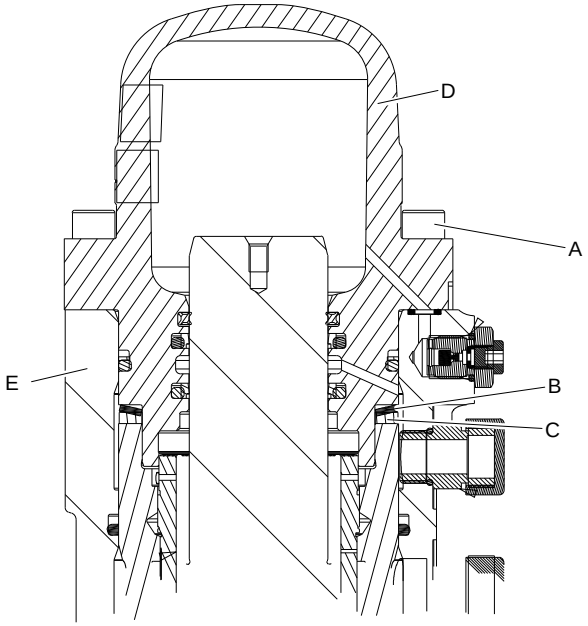

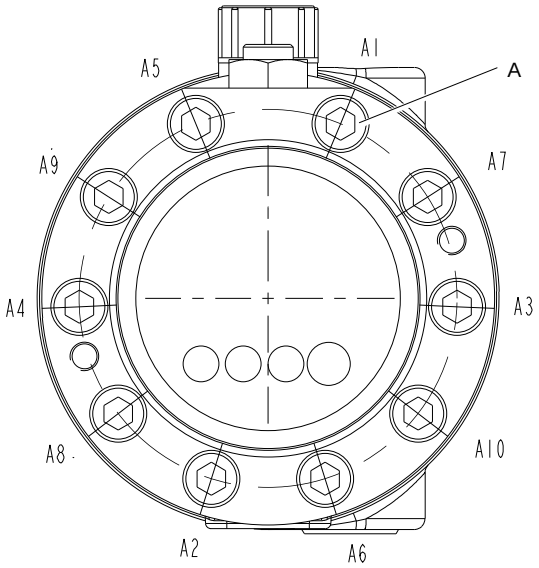

1. Make sure the spring plate (B) and spacer (C) are centered before mounting the back head (D).
2. Press the back head (D) down on the spring plate (B) and spacer (C).
3. Grease the screws (A) with Molykote® 1000 (Molykote is a registered trademark of Dow Corning Corporation), and manually fit them on the back head (D)
4. Torque the screws (A) in the order from A1 to A10 in one step.