OPTIONS AND ACCESSORIES

Optional equipment

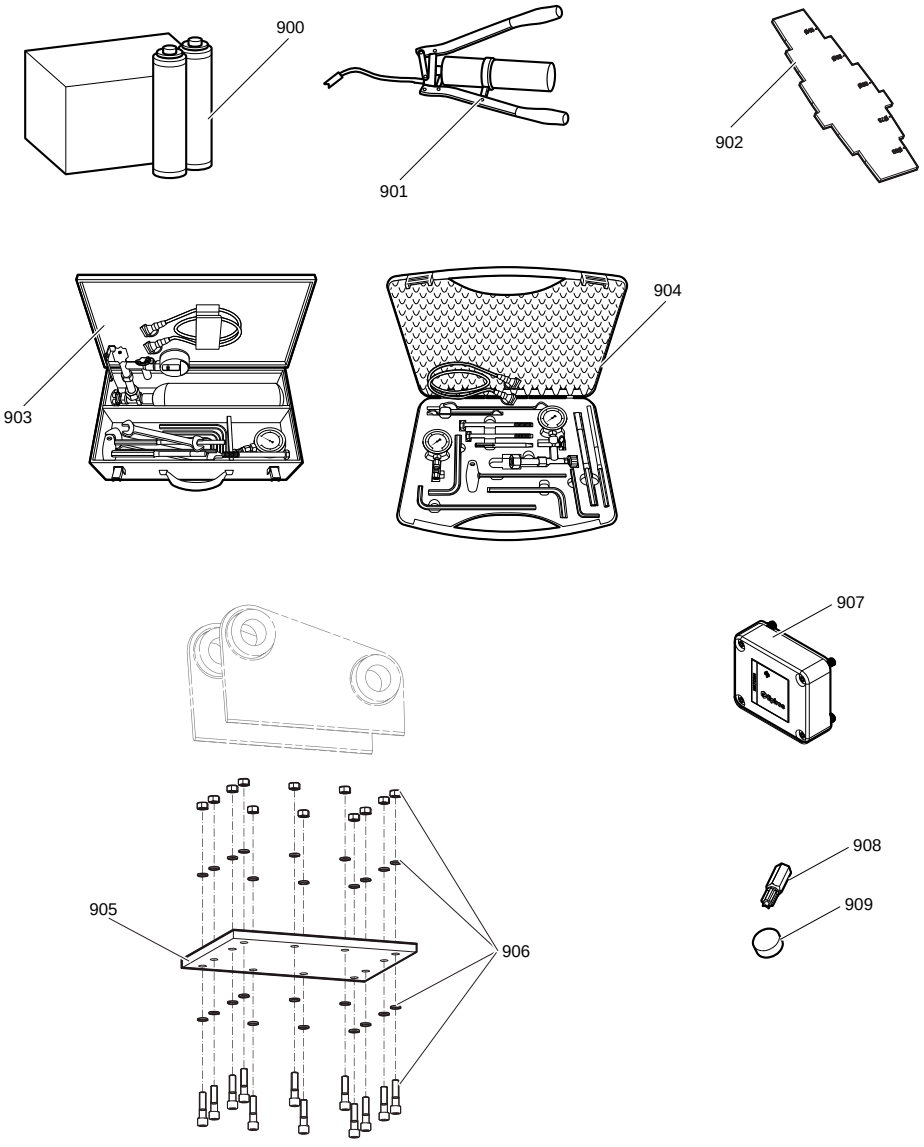

Parts list

REF	PART NO.	DESCRIPTION	QTY	NOTES
900	3363094913	Chisel Paste	1	Cartridge for grease gun, 12 x 400 g (12 x 0.88 lbs)
901	0909107100	Lubrication Gun	1	
902	3315303700	Test Gauge	1	Wear bush
903	3363089844	Maintenance Box	1	Maintenance and charging box with nitrogen cylinder 2 l (0.43 gal (0.53 US gal))
904	3363094940	Maintenance Box	1	Maintenance and charging box without nitrogen cylinder
905	3362269303	Base Plate	1	With through borings
906	3363106507	Bolt Kit	1	
907	3315442526	HATCON Kit	1	LTE
908	3315439105	Security Bit	1	HATCON
909	3315439106	Magnet	1	HATCON