SERVICE DATA

Tightening torques

Ref numbers match the drawing.

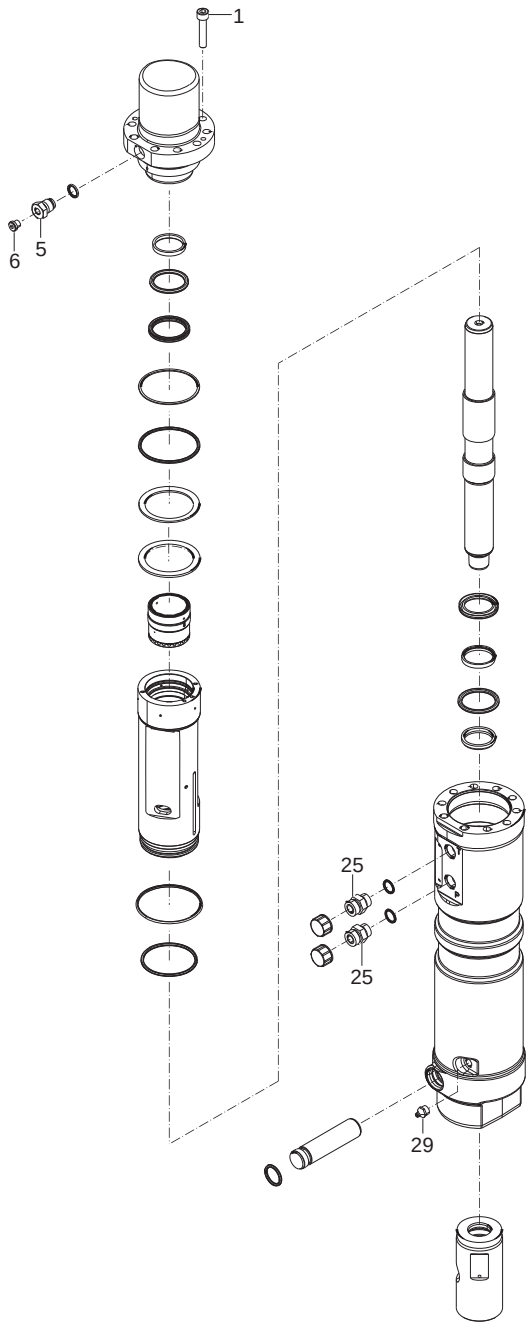

Tightening torques

REF	PART NO.	DESCRIPTION	TORQUE	NOTES
1	—	Allen Screw	28 Nm (21 ft lbf)	
5	—	Filling Valve	130 Nm (96 ft lbf)	
6	—	Threaded Plug	20 Nm (15 ft lbf)	
25	—	Fitting	60 Nm (44 ft lbf)	
29	3360433774	Grease Nipple	20 Nm (15 ft lbf)	