SERVICE KIT

Seal Kit

Numbers match the callouts in the drawing and on the breaker parts diagram.

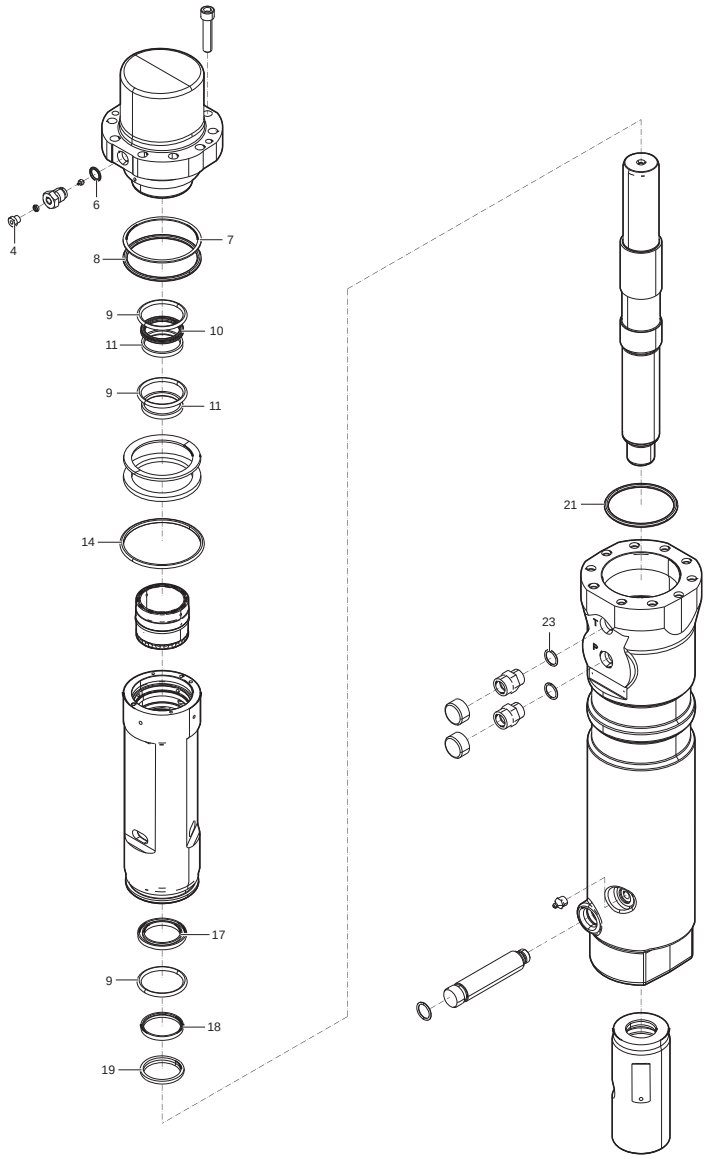

Seal Kit Epiroc part number **3361120011** Crowder SKU EP-3361120011

Kit contents

REF	PART NO.	DESCRIPTION	QTY	NOTES
4	3360478426	Threaded Plug	1	
6	0663925100	O-Ring	1	
7	0661150126	Back-Up Ring	1	
8	3361192020	O-Ring	1	
9	3361192044	O-Ring	3	
10	3361192042	Seal	1	
11	3361192043	Stepseal	2	
14	3315296610	Seal	1	
17	3361192049	Seal	1	
18	3361192050	Stepseal	1	
19	3361192051	Wiper	1	
21	3361192047	O-Ring	1	
23	3361192067	O-Ring	2	
	3361192045	O-Ring	1	
	3361192046	Back-up Ring	1	