SERVICE DATA

Tightening torques

Ref numbers match the drawing.

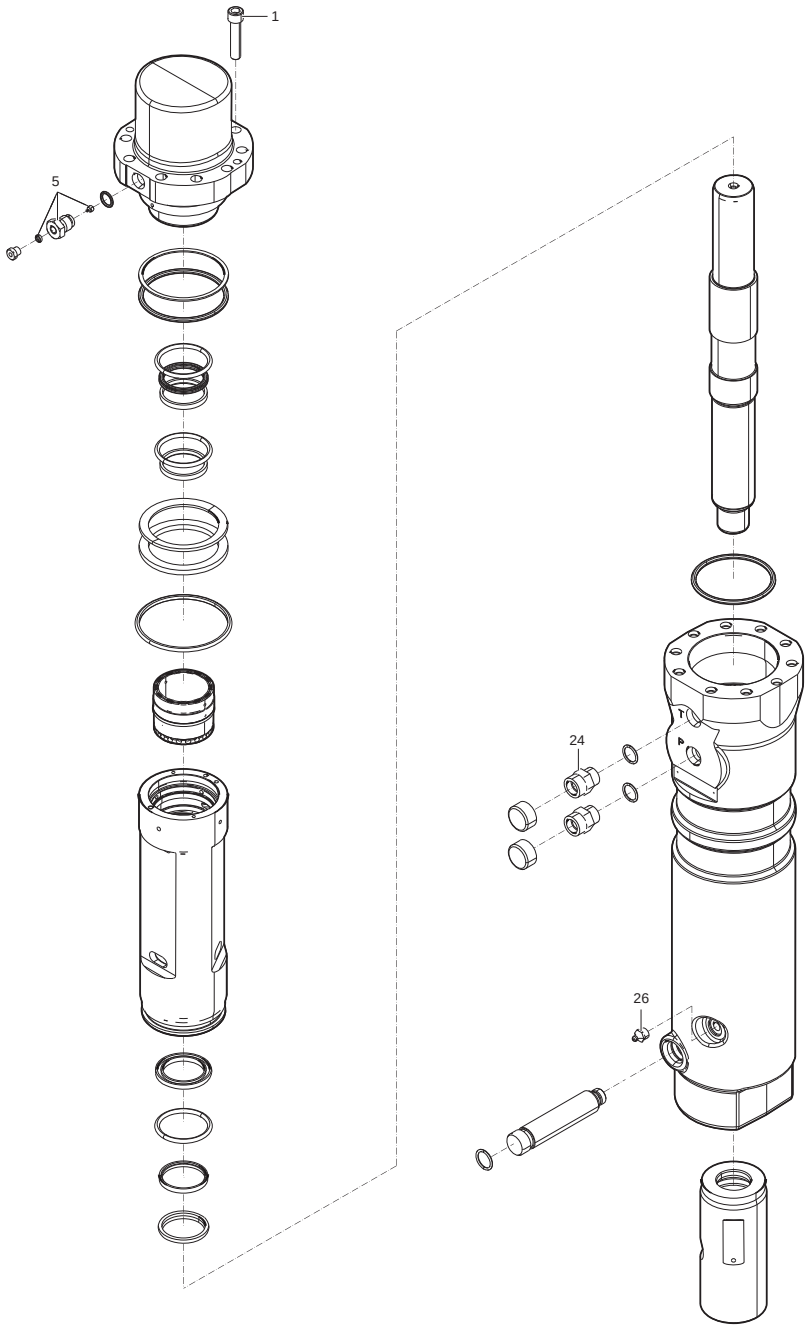

Tightening torques

REF	PART NO.	DESCRIPTION	TORQUE	NOTES
1	—	Allen Screw	65 Nm (48 ft lbf)	
1	—	Allen Screw	78 Nm (58 ft lbf)	
5	—	Filling Valve	130 Nm (96 ft lbf)	
24	—	Fitting	90 Nm (66 ft lbf)	
26	3360433774	Grease Nipple	20 Nm (15 ft lbf)	