OPTIONS AND ACCESSORIES

Optional equipment

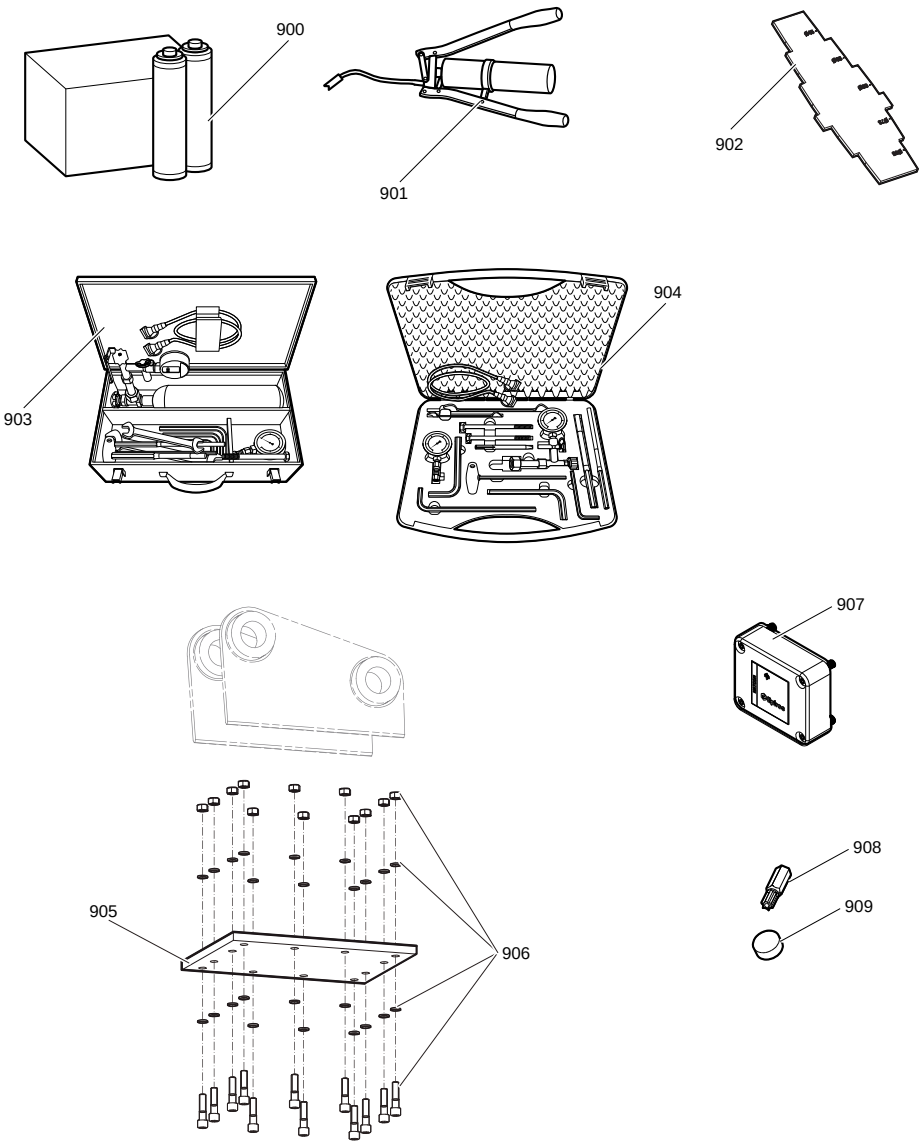

Parts list

REF	PART NO.	DESCRIPTION	QTY	NOTES
	3363094913	Chisel Paste	1	Cartridge for grease gun, 12 x 400 g (12 x 0.88 lbs)
	0909107100	Lubrication Gun	1	
	3315303700	Test Gauge	1	Wear bush
	3363089844	Maintenance Box	1	Maintenance and charging box with nitrogen cylinder 2 l (0.43 gal (0.53 US gal))
	3363094940	Maintenance Box	1	Maintenance and charging box without nitrogen cylinder
	3363099701	Base Plate	1	With through borings
	3363106508	Bolt Kit	1	
	3315442526	HATCON Kit	1	LTE
	3315439105	Security Bit	1	HATCON
	3315439106	Magnet	1	HATCON