SERVICE KIT

Seal Kit

Numbers match the callouts in the drawing and on the breaker parts diagram.

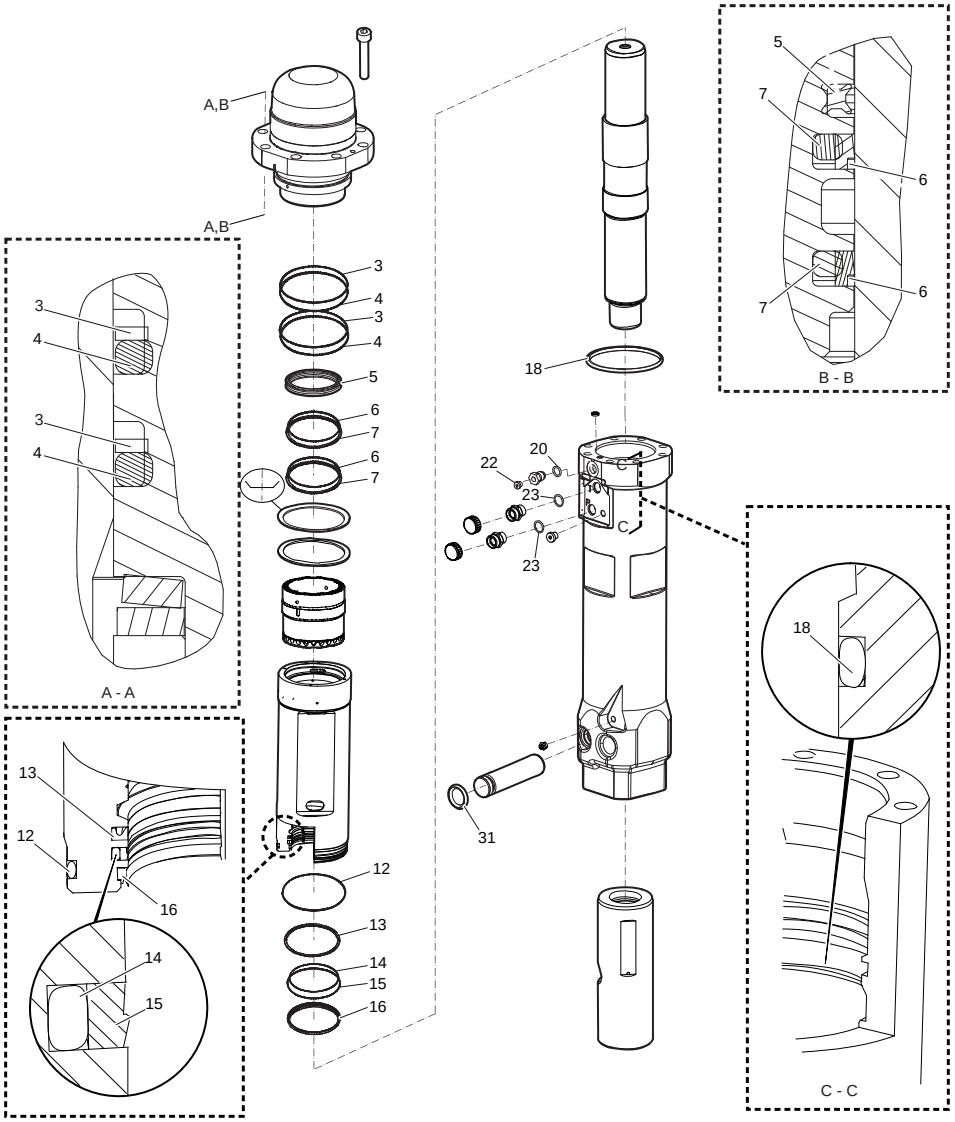

Seal Kit Epiroc part number **3382070009** Crowder SKU EP-3382070009

Kit contents

REF	PART NO.	DESCRIPTION	QTY	NOTES
3	3361192023	Back-Up Ring	2	
4	3361192022	O-Ring	2	
5	3361192017	Seal	1	
6	3361192018	Seal	2	
7	3361192019	O-Ring	2	
12	3361192025	O-Ring	1	
13	3361192027	Seal	1	
14	3361192029	O-Ring	1	
15	3361192028	Seal	1	

REF	PART NO.	DESCRIPTION	QTY	NOTES
16	3361192030	Wiper	1	
18	3315296620	Seal	1	
20	0663925100	O-Ring	1	
22	3360478426	Threaded Plug	1	
23	3361192067	O-Ring	1	
31	0663212006	O-Ring	1	
	0665090014	Seal Ring	1	
	3361192066	O-Ring	1	