SERVICE DATA

Tightening torques

Ref numbers match the drawing.

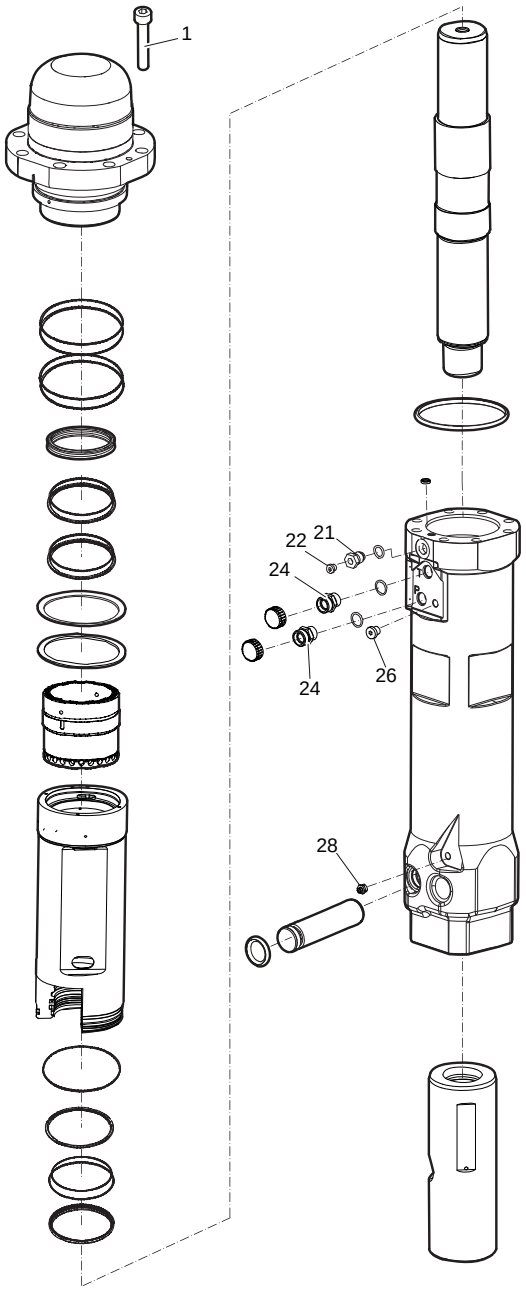

Tightening torques

REF	PART NO.	DESCRIPTION	TORQUE	NOTES
1	—	Screw	200 Nm (148 ft lbf)	
21	—	Filling Valve	130 Nm (96 ft lbf)	
22	—	Threaded Plug	20 Nm (15 ft lbf)	
24	—	Fitting	90 Nm (66 ft lbf)	
26	3363066963	Plug	30 Nm (22 ft lbf)	
28	3360433774	Grease Nipple	20 Nm (15 ft lbf)	