WORKING TOOLS

Working tools

Sizes and weights are shown beside each tool in the drawing.

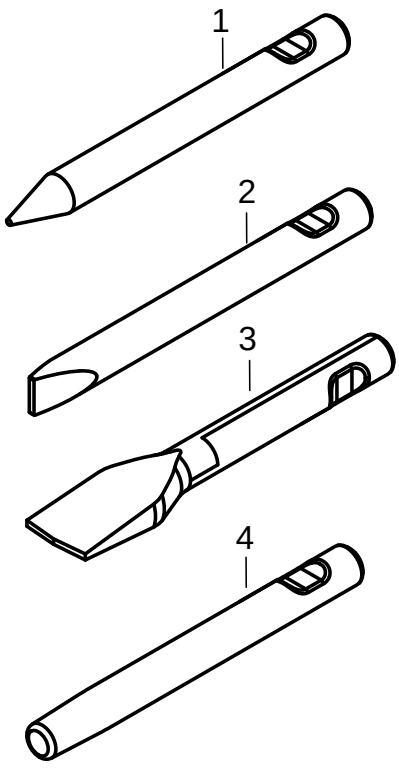

L=380 mm, Lt=665 mm, Wt=18 kg
L=14.96 inch, Lt=26.18 inch, Wt=39.7 lb

W=70 mm, L=380 mm, Lt=665 mm, Wt=18.7 kg
W=1.65 inch, L=10.43 inch, Lt=16.73 inch, Wt=9.3 lb

W=200 mm, L=435 mm, Lt=720 mm, Wt=22.7 kg
W=7.87 inch, L=17.13 inch, Lt=28.35 inch, Wt=50 lb

L=380 mm, Lt=665 mm, Wt=17.6 kg
L=14.96 inch, Lt=26.18 inch, Wt=38.8 lb

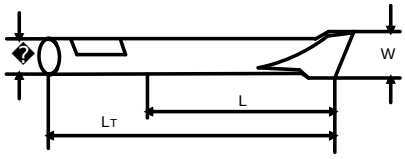

Working tools

REF	PART NO.	DESCRIPTION	QTY	NOTES
1	3083342429	Moil Point	1	Conical
2	3083342430	Chisel	1	Cross
3	3363140005	Asphalt Cutter	1	Cross
4	3083342431	Blunt Tool	1	