OPTIONS AND ACCESSORIES

Optional equipment

Carrier adapter plates, base plates and bolt kits are carrier-specific: call 888-883-5144 for pricing.

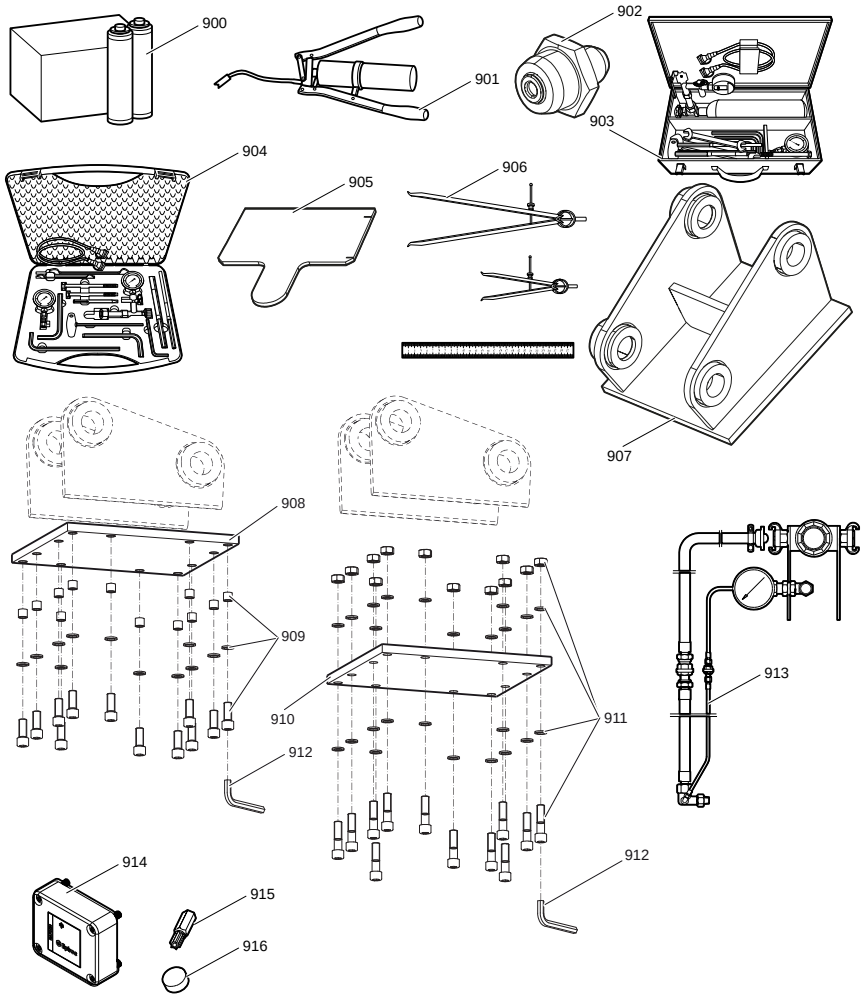

Parts list

REF	PART NO.	DESCRIPTION	QTY	NOTES
900	3363122356	Chisel Paste	1	Bio, Cartridge, 12 x 550 g (1.2 lbs)
900	3363091200	Chisel Paste	1	Cartridge, 12 x 500 g (1.1 lbs)
901	3363034567	Grease Pump	1	
902	3360433774	Grease Nipple	1	
903	3363089845	Maintenance Box	1	Maintenance and charging box with nitrogen cylinder 5 l, 1.1 gal (1.32 US gal)
904	3363094940	Maintenance Box	1	Maintenance and charging box without nitrogen cylinder
905	3362235295	Test Gauge	1	lower wear bush
906	3363094952	Inside Calliper	1	upper wear bush
907	—	Adapter Plate	1	matching the carrier. Consult the authorized Customer Center/Dealer in your area
908	3363093497	Base Plate	1	with threaded inserts
909	3363087305	Bolt Kit	1	
910	3363102875	Base Plate	1	with through borings
911	3363094577	Bolt Kit	1	
912	3360478949	Allen Key (27 Mm)	1	
913	3363103077	Adapter Kit	1	for underwater applications
914	3315442520	HATCON Kit 1	1	LTE
915	3315439105	Security Bit	1	HATCON
916	3315439106	Magnet	1	HATCON