SERVICE KIT

MG 1500 Blade Kit

Numbers match the callouts in the drawing and on the parts diagram.

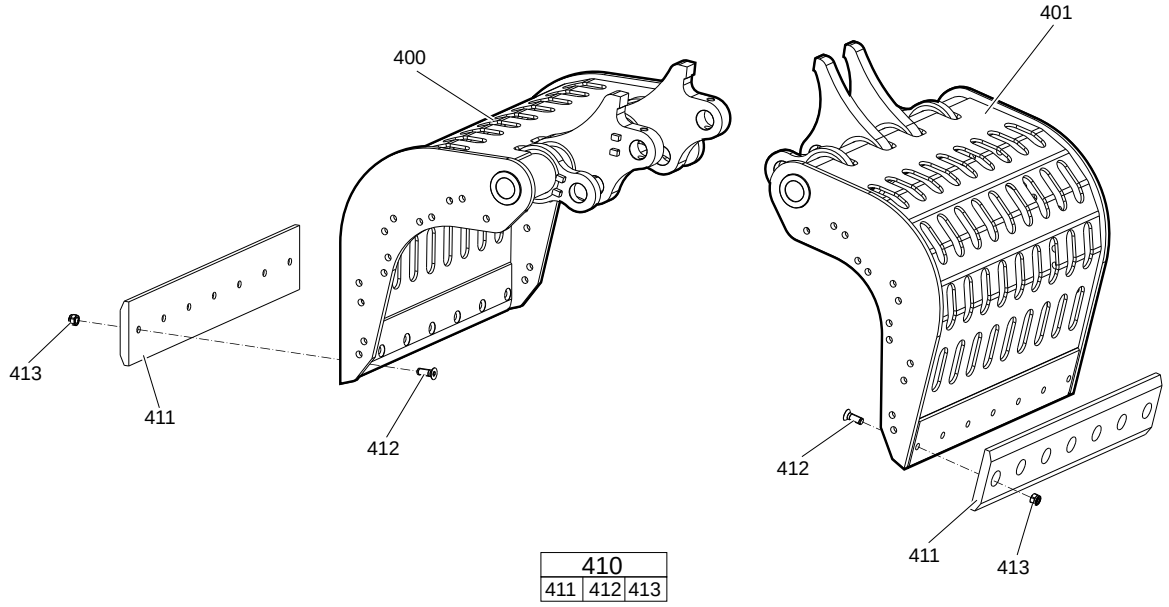

MG 1500 Blade Kit Epiroc part number **3363124981** Crowder SKU EP-3363124981 Fits MG 1500, MG 1500 R

Kit contents

REF	PART NO.	DESCRIPTION	QTY	NOTES
411	—	Blade	2	not sold separately
412	3363124460	Hexagon Socket Countersunk Head Screw	14	
413	3363124461	Hexagon Nut	14	

SERVICE KIT

MG 1500 / 1800 R Cylinder Seal Kit

Numbers match the callouts in the drawing and on the parts diagram.

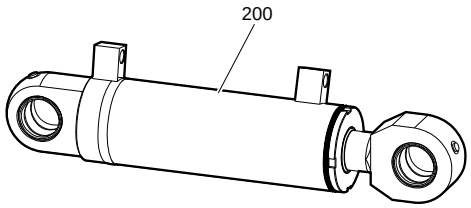

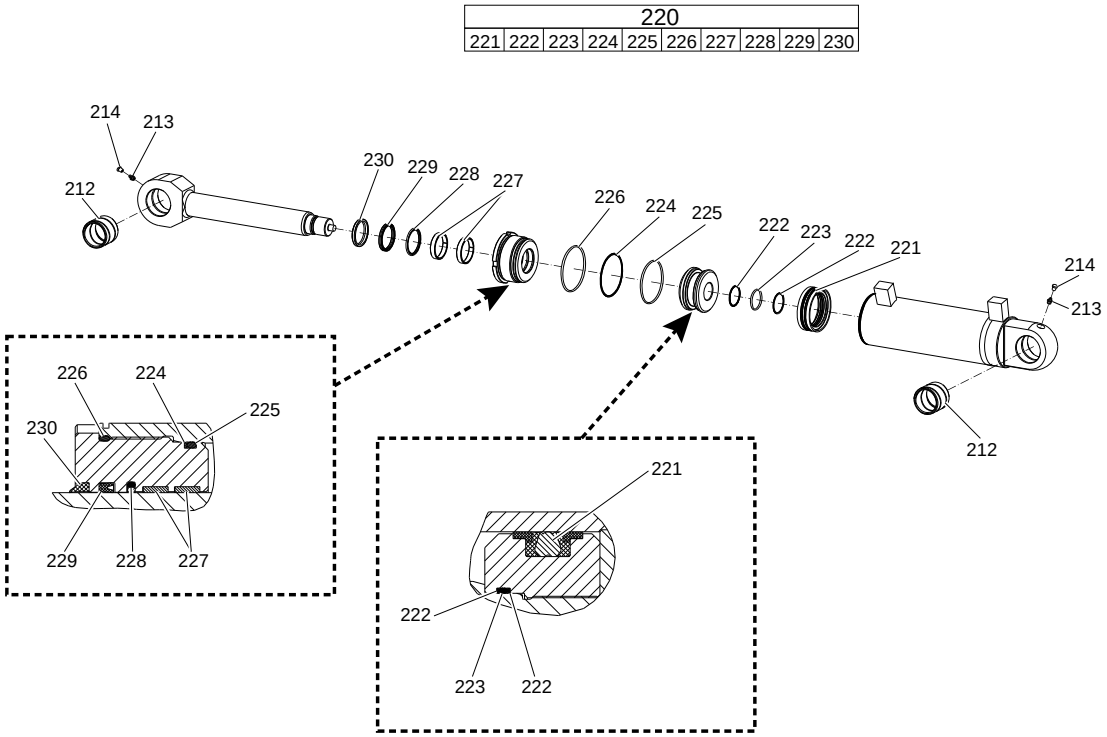

MG 1500 / 1800 R Cylinder Seal Kit Epiroc part number **3376684170** Crowder SKU EP-3376684170 Fits MG 1500, MG 1500 R, MG 1800 R

Kit contents

REF	PART NO.	DESCRIPTION	QTY	NOTES
221	—	Seal	1	not sold separately
222	—	Back-Up Ring	2	not sold separately
223	—	O-Ring	1	not sold separately
224	—	Back-Up Ring	1	not sold separately
225	—	O-Ring	1	not sold separately
226	—	O-Ring	1	not sold separately
227	—	Sliding Ring	2	not sold separately

SERVICE KIT

MG 1500 / 1800 R / 2300 R / 2700 R Rotary Seal Kit

Numbers match the callouts in the drawing and on the parts diagram.

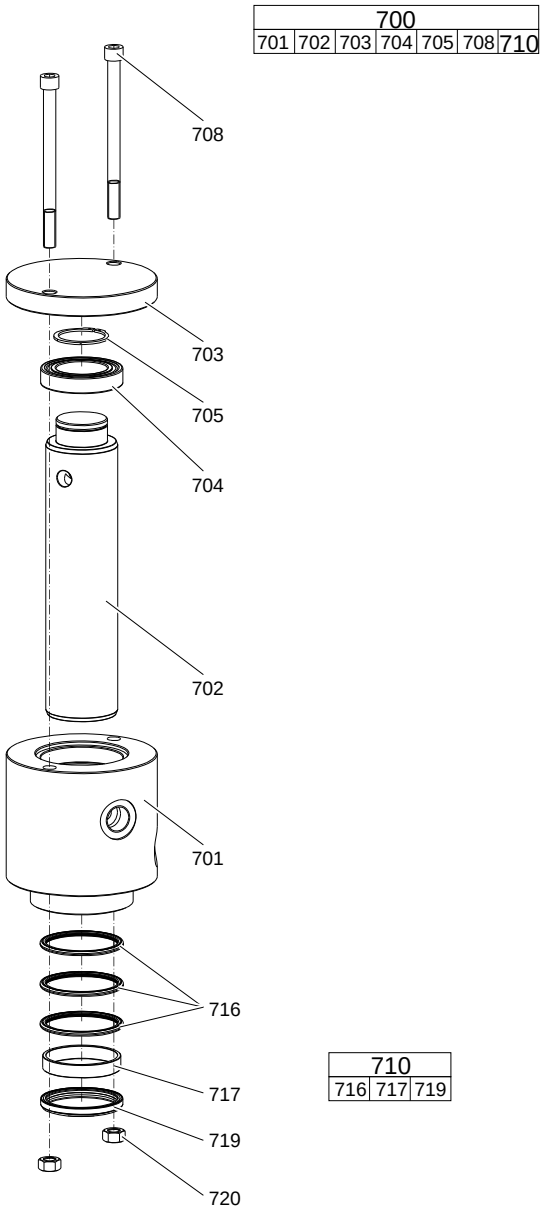

MG 1500 / 1800 R / 2300 R / 2700 R Rotary Seal Kit Epiroc part number **3376684171** Crowder SKU EP-3376684171

Fits MG 1500, MG 1500 R, MG 1800 R, MG 2300 R, MG 2700 R

Kit contents

REF	PART NO.	DESCRIPTION	QTY	NOTES
70	—	O-Ring	2	not sold separately
716	—	Seal	3	not sold separately
717	—	Sliding Ring	1	not sold separately
719	—	Wiper	1	not sold separately

SERVICE KIT

MG 1500 Tooth Blade Kit (Later Serials)

Numbers match the callouts in the drawing and on the parts diagram.

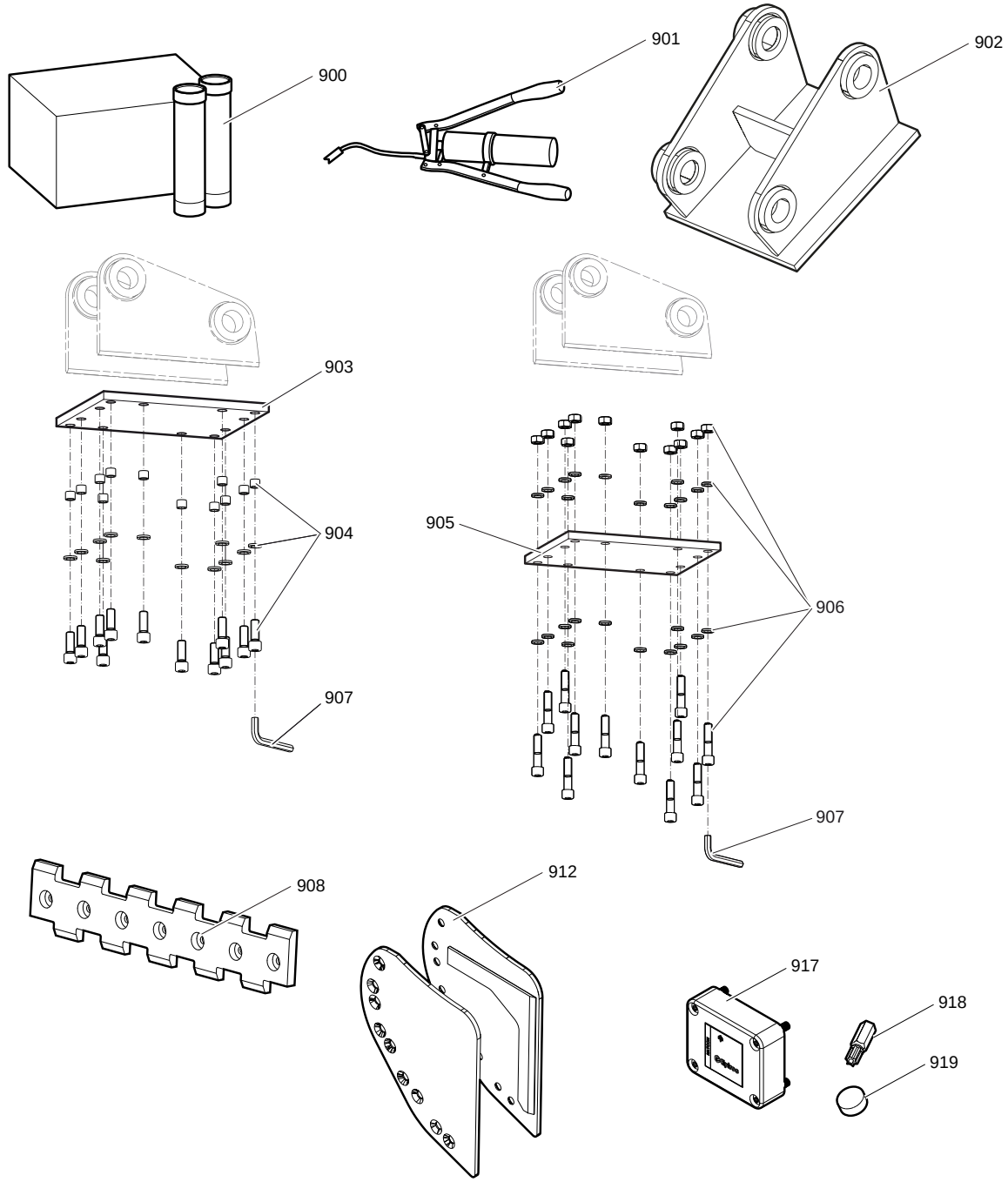

MG 1500 Tooth Blade Kit (Later Serials) Epiroc part number **3376684105** Crowder SKU EP-3376684105 Fits MG 1500, MG 1500 R

Kit contents

REF	PART NO.	DESCRIPTION	QTY	NOTES
909	—	Tooth Blade	2	not sold separately
910	—	Hexagon Socket Countersunk Head Screw	14	not sold separately
911	—	Hexagon Nut	14	not sold separately

SERVICE KIT

MG 1500 / 1800 R Side Closing Plates Kit (Later Serials)

Numbers match the callouts in the drawing and on the parts diagram.

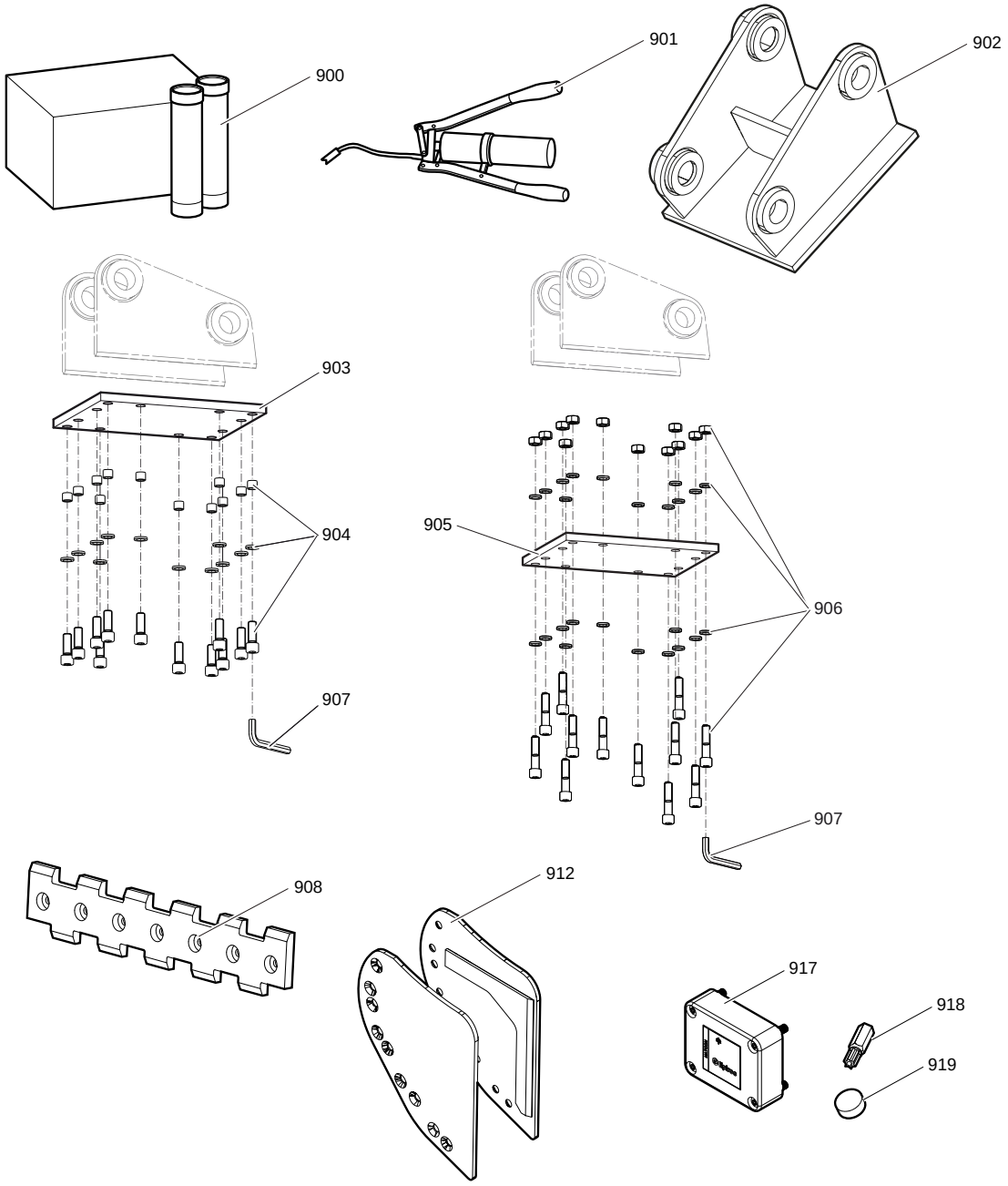

MG 1500 / 1800 R Side Closing Plates Kit (Later Serials) Epiroc part number **3376684106** Crowder SKU EP-3376684106

Fits MG 1500, MG 1500 R, MG 1800 R

Kit contents

REF	PART NO.	DESCRIPTION	QTY	NOTES
913	—	Side Closing Plate	2	not sold separately
914	—	Side Closing Plate	2	not sold separately
915	—	Hexagon Socket Countersunk Head Screw	28	not sold separately
916	3363124172	Hexagon Nut	28	

SERVICE KIT

MG 800 / 1000 / 1500 Side Closing Plates Kit

Numbers match the callouts on the parts diagram.

MG 800 / 1000 / 1500 Side Closing Plates Kit Epiroc part number **3376683106** Crowder SKU EP-3376683106

Fits MG 800, MG 800 R, MG 1000, MG 1000 R, MG 1500, MG 1500 R

Kit contents

REF	PART NO.	DESCRIPTION	QTY	NOTES
913	—	Side Closing Plate	2	not sold separately
914	—	Side Closing Plate	2	not sold separately
915	—	Hexagon Head Screw	24	not sold separately
916	—	Lock Nut	24	not sold separately

SERVICE KIT

Kits supplied complete

Epiroc does not publish an itemised list for these kits; each is supplied complete under one part number.

Kits supplied complete

PART NO.	DESCRIPTION	QTY	NOTES
3363098276	MG 1500 Label Kit (Earlier Serials)	1	contains the decal set for the multi grapple
3363124989	MG 1500 Label Kit (Later Serials)	1	contains the decal set for the multi grapple
3376682182	CB 750 / 950, MG 800 / 1000 / 1500 / 1800 R / 2300 R / 2700 R Hydraulic Motor Seal Kit	1	contains the seals for the rotation hydraulic motor
3363124376	MG 1500 / 1800 R / 2300 R / 2700 R Hydraulic Motor Seal Kit (Later Serials)	1	contains the seals for the rotation hydraulic motor
3376684108	MG 1500 / 1800 R Life Ring Seal Kit (Later Serials)	1	contains the seals for the live (slewing) ring
3363129337	MG 400 / 500 / 800 / 1000 / 1500 / 1800 R / 2300 R / 2700 R Life Ring Seal Kit	1	contains the seals for the live (slewing) ring
3376683105	MG 800 / 1000 / 1500 Tooth Blade Kit	1	contains the optional tooth blades with their screws and nuts, for block and stone handling