SERVICE KIT

MG 300 R / 400 Blade Kit

Numbers match the callouts on the parts diagram.

MG 300 R / 400 Blade Kit Epiroc part number **3363125139** Crowder SKU EP-3363125139 Fits MG 300 R, MG 400, MG 400 R

Kit contents

REF	PART NO.	DESCRIPTION	QTY	NOTES
411	—	Blade	2	not sold separately
412	3363125015	Hexagon Socket Countersunk Head Screw	10	
413	3363087617	Hexagon Nut	10	

SERVICE KIT

MG 400 Blade Kit (Later Serials)

Numbers match the callouts in the drawing and on the parts diagram.

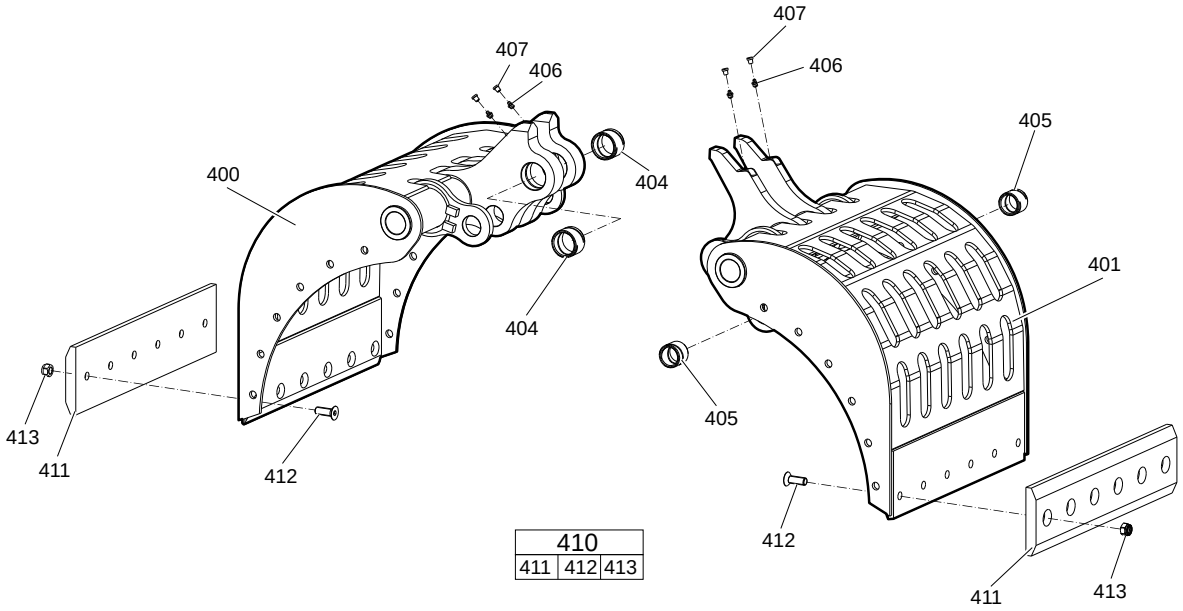

MG 400 Blade Kit (Later Serials) Epiroc part number **3363124282** Crowder SKU EP-3363124282 Fits MG 400, MG 400 R

Kit contents

REF	PART NO.	DESCRIPTION	QTY	NOTES
411	—	Blade	2	not sold separately
412	3363124515	Hexagon Head Screw	12	
413	0291111400	Lock Nut	12	

SERVICE KIT

MG 400 / 500 Cylinder Seal Kit

Numbers match the callouts in the drawing and on the parts diagram.

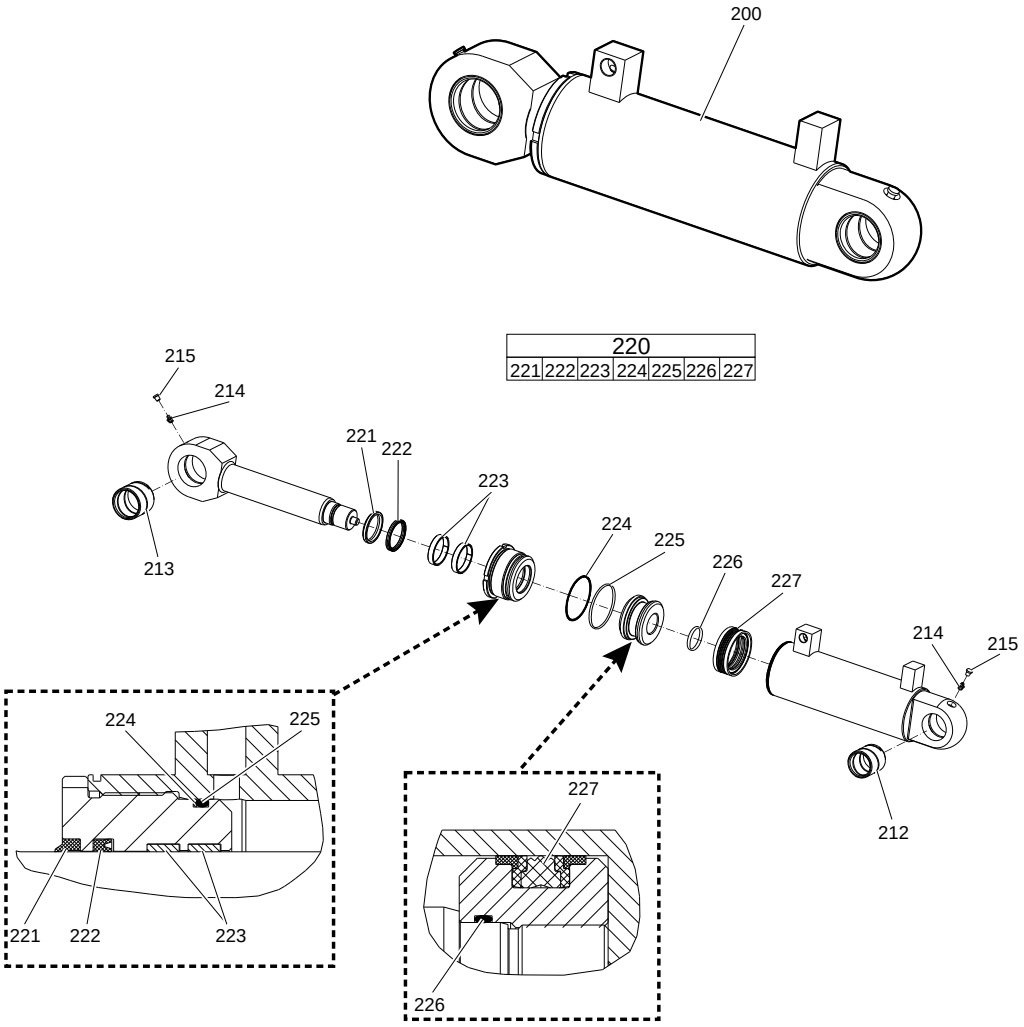

MG 400 / 500 Cylinder Seal Kit Epiroc part number **3376680158** Crowder SKU EP-3376680158 Fits MG 400, MG 400 R, MG 500, MG 500 R

Kit contents

REF	PART NO.	DESCRIPTION	QTY	NOTES
221	—	Wiper	1	not sold separately
222	—	Seal	1	not sold separately
223	—	Seal	2	not sold separately
224	—	Back-Up Ring	1	not sold separately
225	—	O-Ring	1	not sold separately
226	—	O-Ring	1	not sold separately
227	—	Seal	1	not sold separately

SERVICE KIT

MG 200 R / 300 R / 400 / 500 Rotary Seal Kit

Numbers match the callouts in the drawing and on the parts diagram.

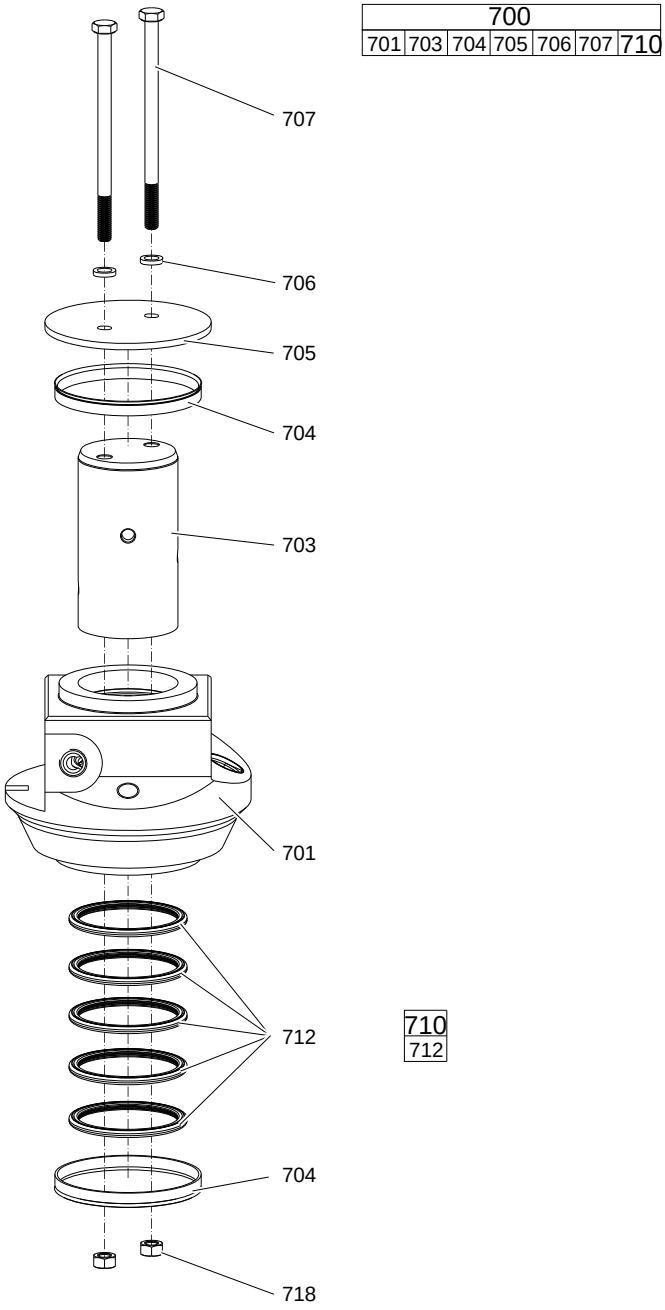

MG 200 R / 300 R / 400 / 500 Rotary Seal Kit Epiroc part number **3376678152** Crowder SKU EP-3376678152

Fits MG 200 R, MG 300 R, MG 400, MG 400 R, MG 500, MG 500 R

Kit contents

REF	PART NO.	DESCRIPTION	QTY	NOTES
712	3376100865	Seal	5	

SERVICE KIT

MG 400 Tooth Blade Kit

Numbers match the callouts in the drawing and on the parts diagram.

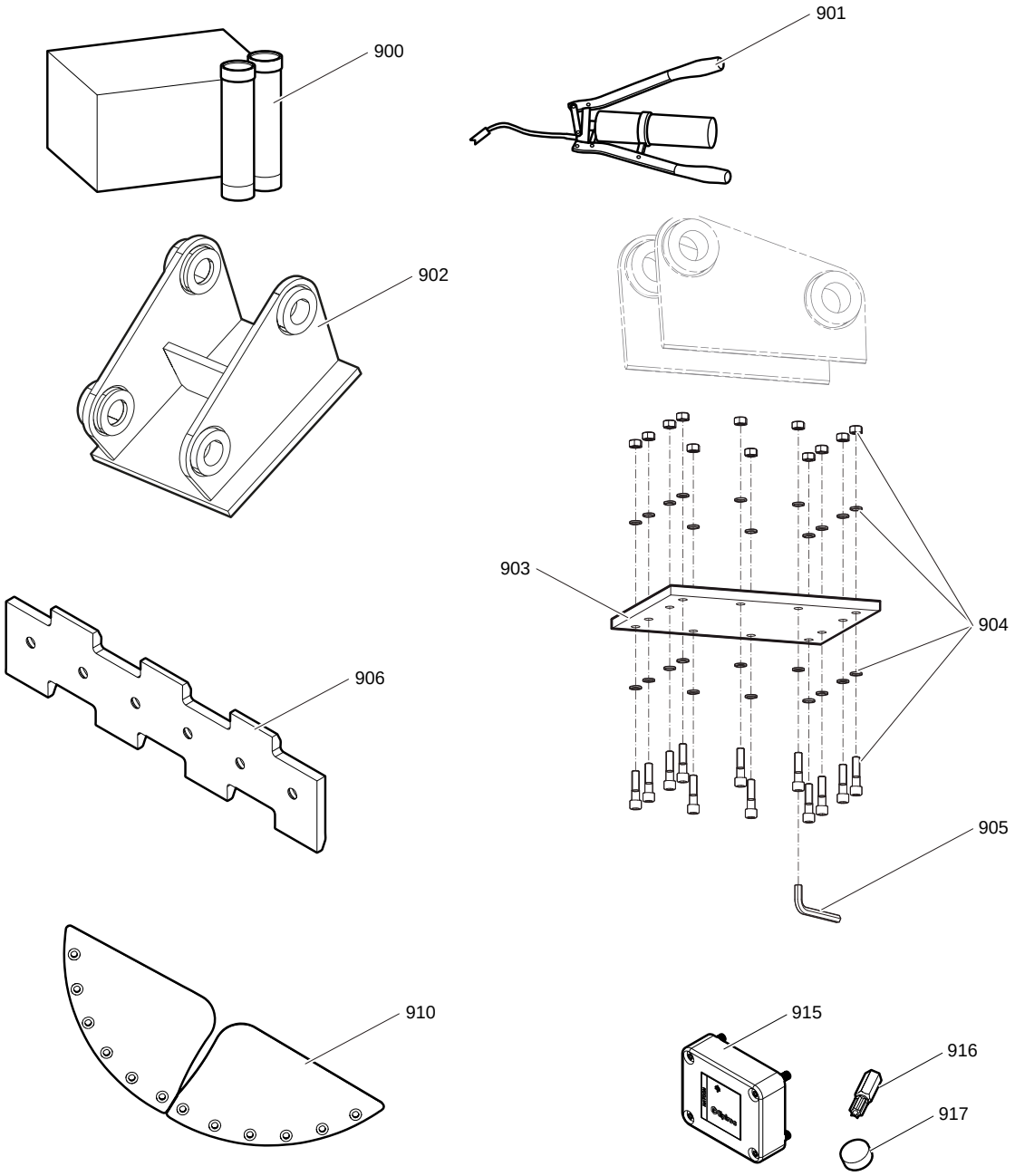

MG 400 Tooth Blade Kit Epiroc part number **3376680105** Crowder SKU EP-3376680105 Fits MG 400, MG 400 R

Kit contents

REF	PART NO.	DESCRIPTION	QTY	NOTES
907	—	Tooth Blade	2	not sold separately
908	—	Hexagon Head Screw	12	not sold separately
909	—	Lock Nut	12	not sold separately

SERVICE KIT

MG 400 Side Closing Plates Kit

Numbers match the callouts in the drawing and on the parts diagram.

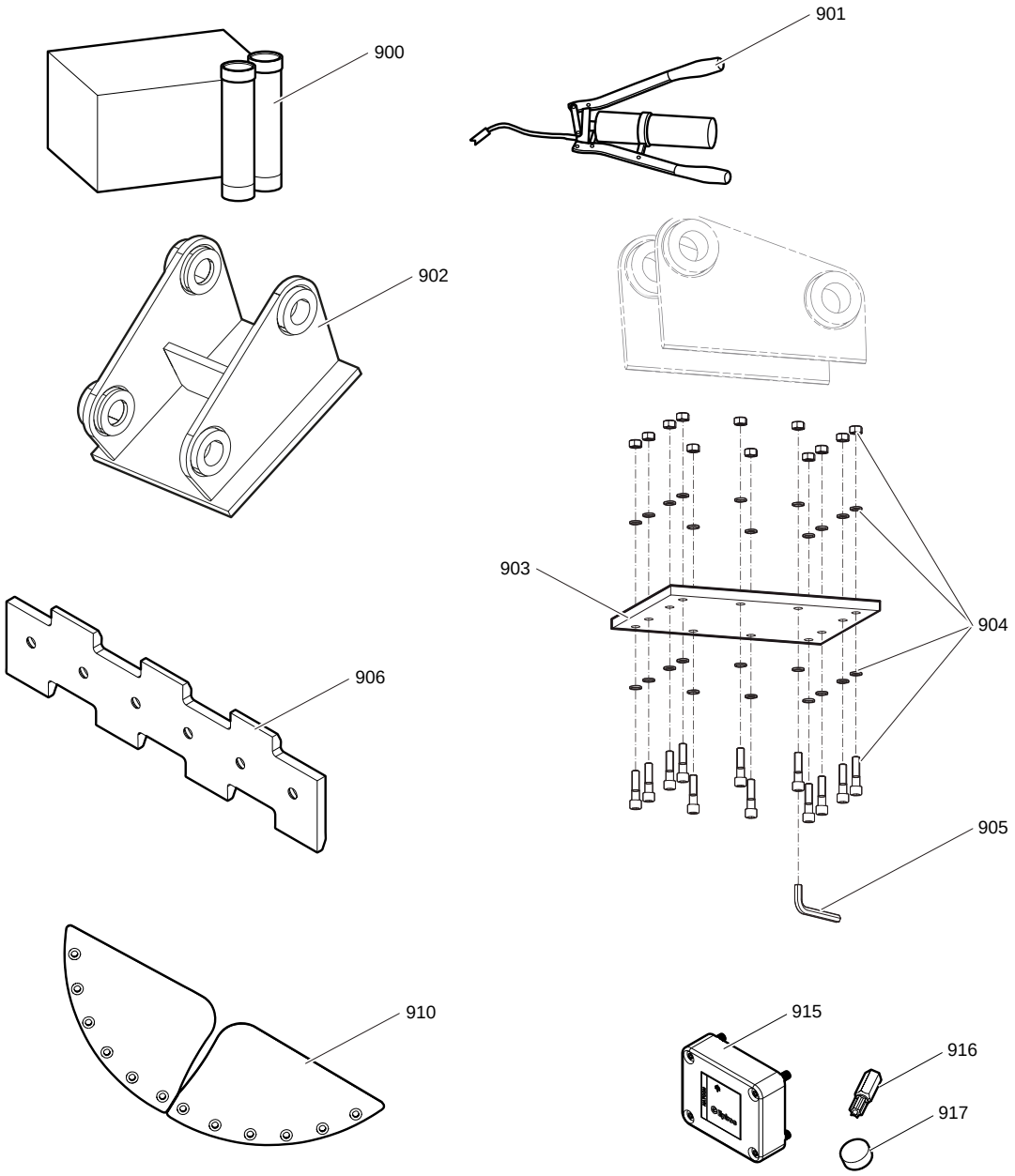

MG 400 Side Closing Plates Kit Epiroc part number **3376680106** Crowder SKU EP-3376680106 Fits MG 400, MG 400 R

Kit contents

REF	PART NO.	DESCRIPTION	QTY	NOTES
911	—	Side Closing Plate	2	not sold separately
912	—	Side Closing Plate	2	not sold separately
913	—	Allen Screw, M16 X 35 Mm 10.9	24	not sold separately
914	—	Hexagon Nut, M16 A2k	24	not sold separately

SERVICE KIT

Kits supplied complete

Epiroc does not publish an itemised list for these kits; each is supplied complete under one part number.

Kits supplied complete

PART NO.	DESCRIPTION	QTY	NOTES
3363106251	MG 400 Label Kit	1	contains the decal set for the multi grapple
3376680159	MG 400 / 500 Hydraulic Motor Seal Kit (Earlier Serials)	1	contains the seals for the rotation hydraulic motor
3363124374	MG 400 / 500 R / 800 R Hydraulic Motor Seal Kit (Later Serials)	1	contains the seals for the rotation hydraulic motor
3376678108	CB 350, MG 100 R / 200 R / 300 R / 400 Life Ring Seal Kit	1	contains the seals for the live (slewing) ring
3363129337	MG 400 / 500 / 800 / 1000 / 1500 / 1800 R / 2300 R / 2700 R Life Ring Seal Kit	1	contains the seals for the live (slewing) ring