SERVICE KIT

Accumulator Repair Kit

Numbers match the callouts in the drawing and on the breaker parts diagram.

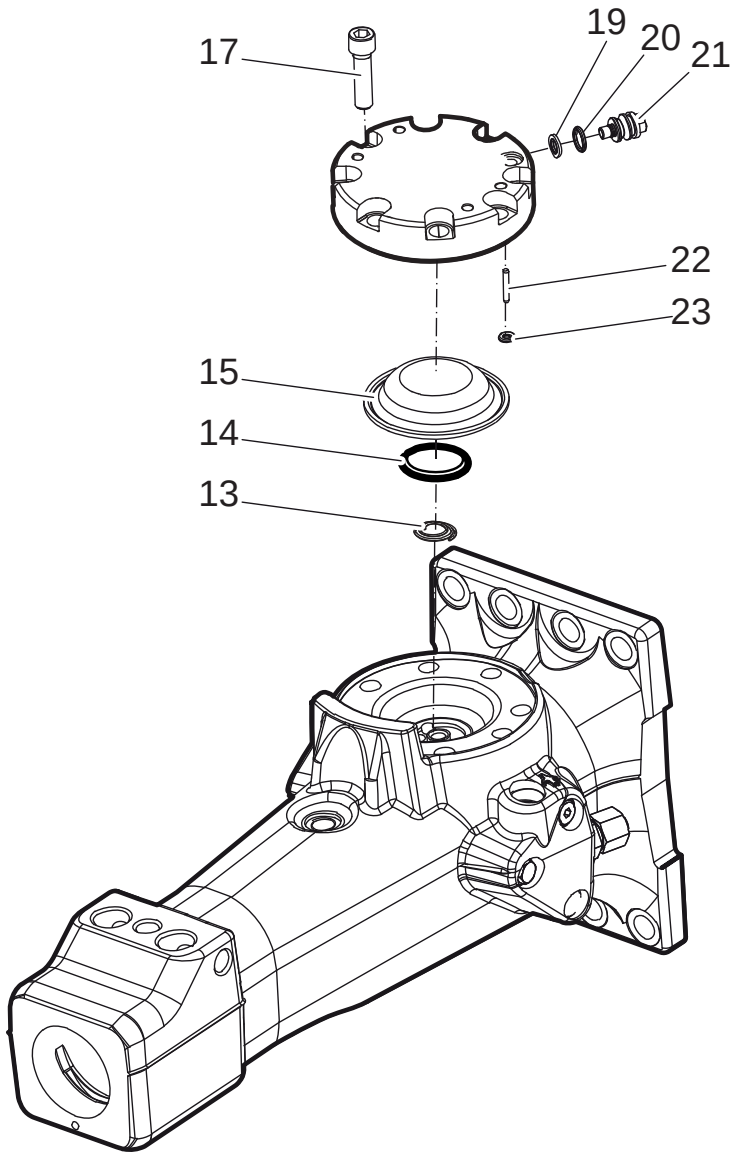

Accumulator Repair Kit Epiroc part number **3315359610** Crowder SKU EP-3315359610

Kit contents

REF	PART NO.	DESCRIPTION	QTY	NOTES
14	3315359521	Diaphragm Support	1	
15	3315238200	Diaphragm	1	
17	0211196534	Hex Socket Screw	8	
19	3115329002	Seal Ring	1	
20	0663212000	O-Ring	1	
21	3315366000	Valve	1	
22	0101414000	Pin	1	
23	0663211400	O-Ring	1	