OPTIONAL PARTS

Oversize bushings

Oversize bushings for worn breaker bodies.

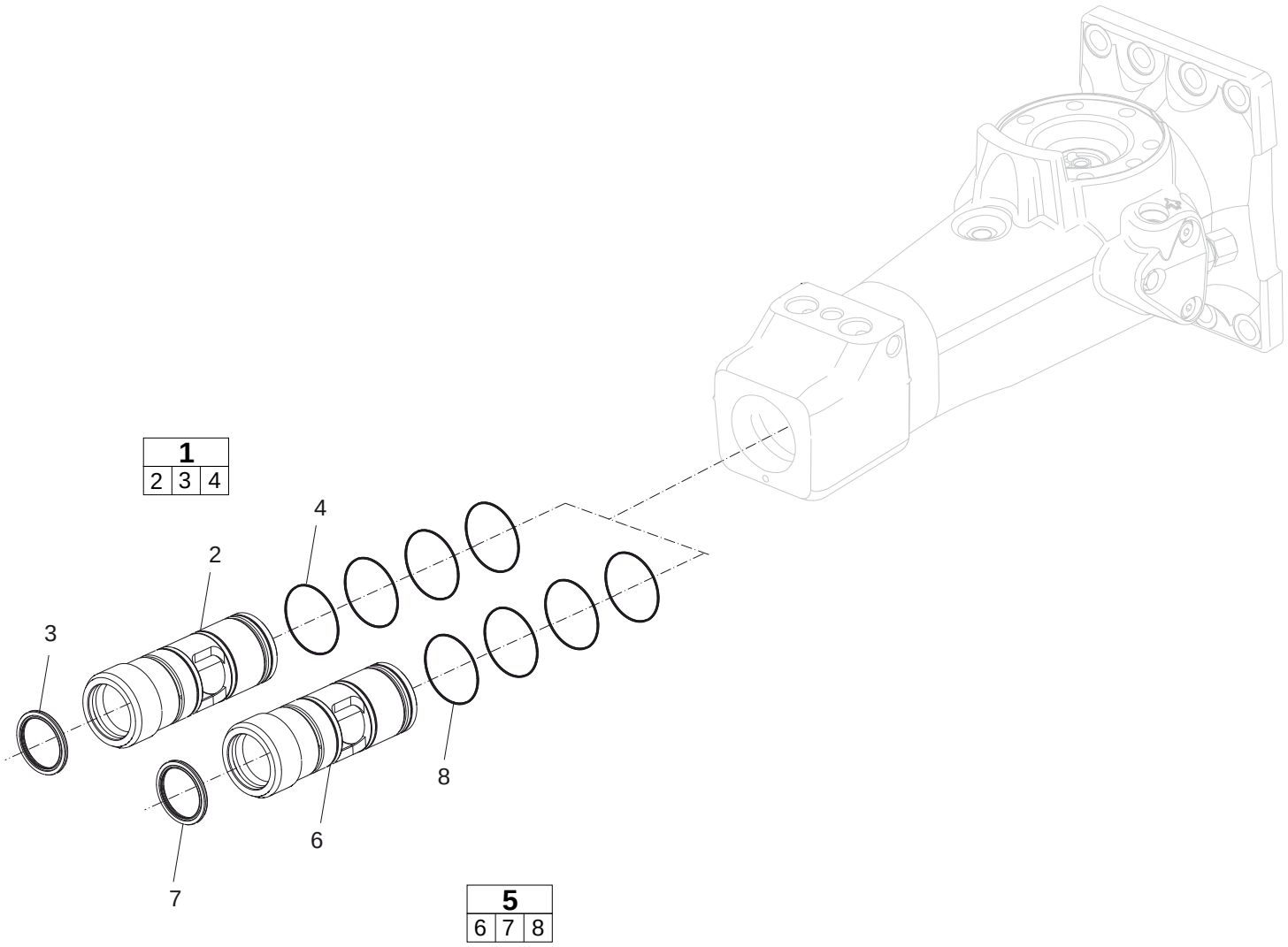

Parts list

REF	PART NO.	DESCRIPTION	QTY	NOTES
1	3315353860	Bushing	1	OVERSIZE, complete
2	—	Bushing	1	Not sold separately. Ø 71.5 mm (Ø 2.81 in.)
3	3315356500	Scraper Ring	1	
4	0663210289	O-Ring	4	
5	3315353863	Bushing	1	OVERSIZE, complete
6	—	Bushing	1	Not sold separately. Ø 73.0 mm (Ø 2.87 in.)
7	3315356500	Scraper Ring	1	
8	0663210289	O-Ring	4	