HATCON

HATCON (horizontal mount)

Horizontal mount. Numbers match the drawing.

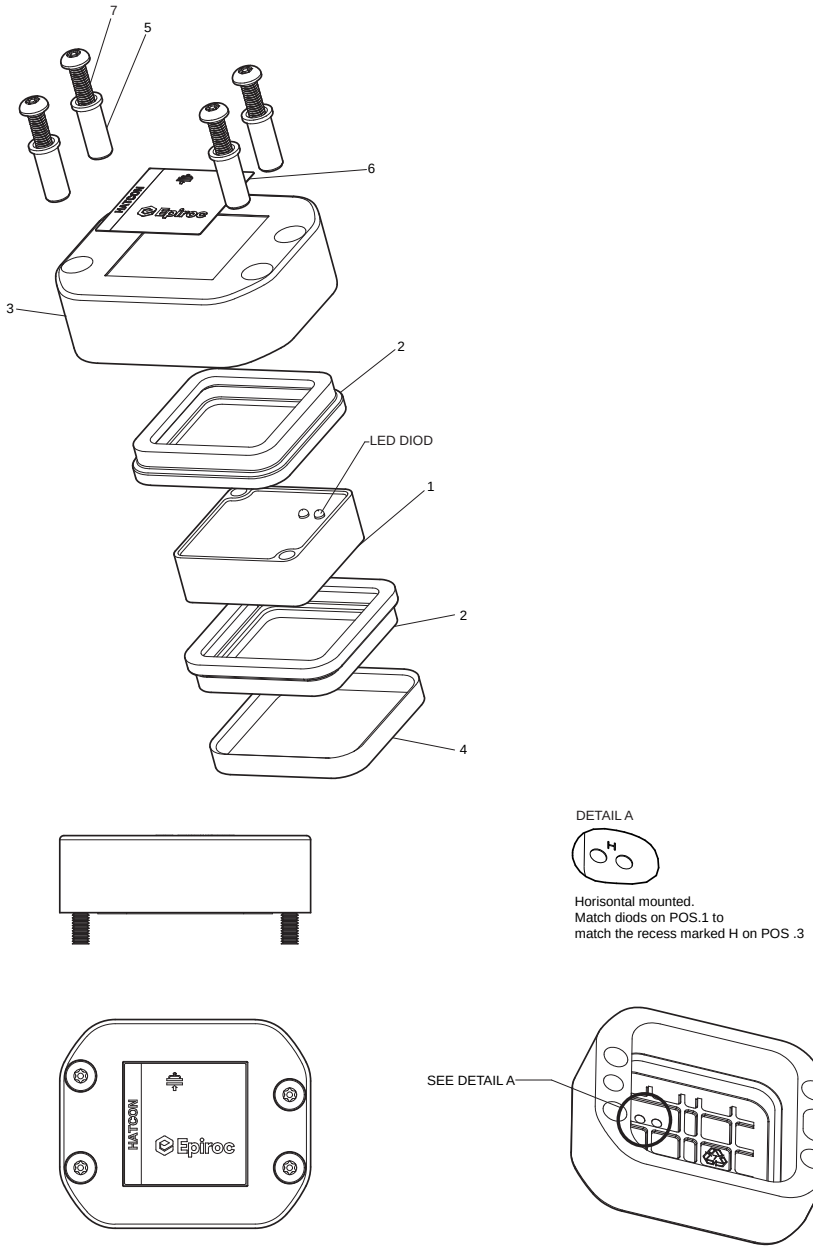

Parts list

REF	PART NO.	DESCRIPTION	QTY	NOTES
1	—	Tracking Module	1	Not sold separately
2	3315439130	Damper	2	
3	3315439117	Housing Type 2	1	
4	3315439140	Lock Ring	1	
5	3315439120	Sleeve	4	
6	3315439100	Product Label	1	
7	3315442600	Screw HATCON	4	