SERVICE KIT

Lower Hammer Part Kit

Numbers match the callouts in the drawing and on the breaker parts diagram.

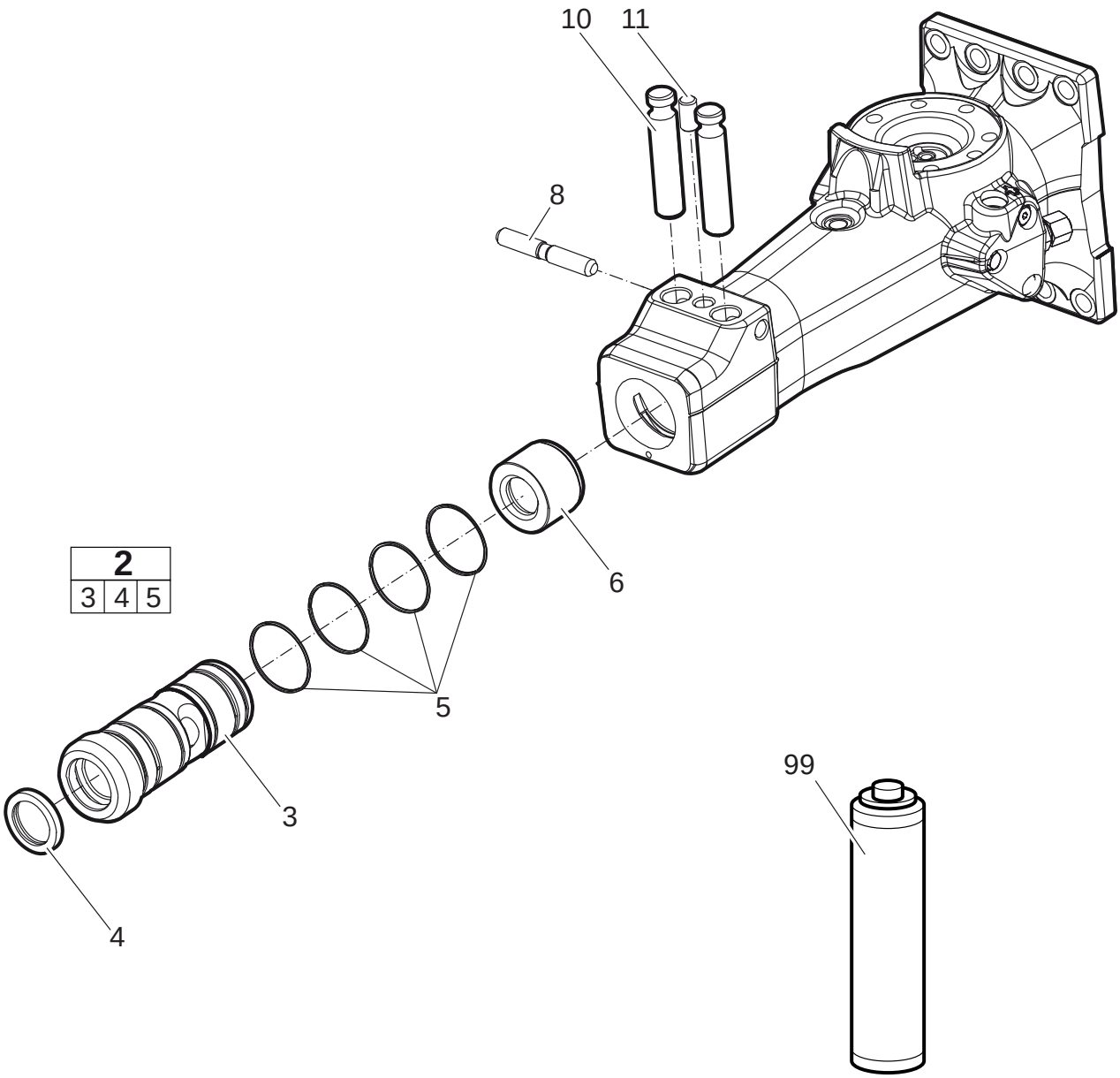

Lower Hammer Part Kit Epiroc part number **3315352121** Crowder SKU EP-3315352121

Kit contents

REF	PART NO.	DESCRIPTION	QTY	NOTES
2	3315353880	Bushing	1	Complete; includes 3, 4 and 5
3	—	Bushing	1	Not sold separately; part of 2
4	3315356500	Scraper Ring	1	
5	0663210289	O-Ring	4	
6	3315298500	Stop Ring	1	

REF	PART NO.	DESCRIPTION	QTY	NOTES
8	3315293010	Lock Pin	1	
10	3315300010	Tool Retainer	2	
11	3315304600	Lock Buffer	1	
99	—	Chisel Paste	1	Not sold separately. Bio, cartridge 1 x 400 g (0.88 lbs)