SERVICE KIT

Seal Kit

Numbers match the callouts in the drawing and on the breaker parts diagram.

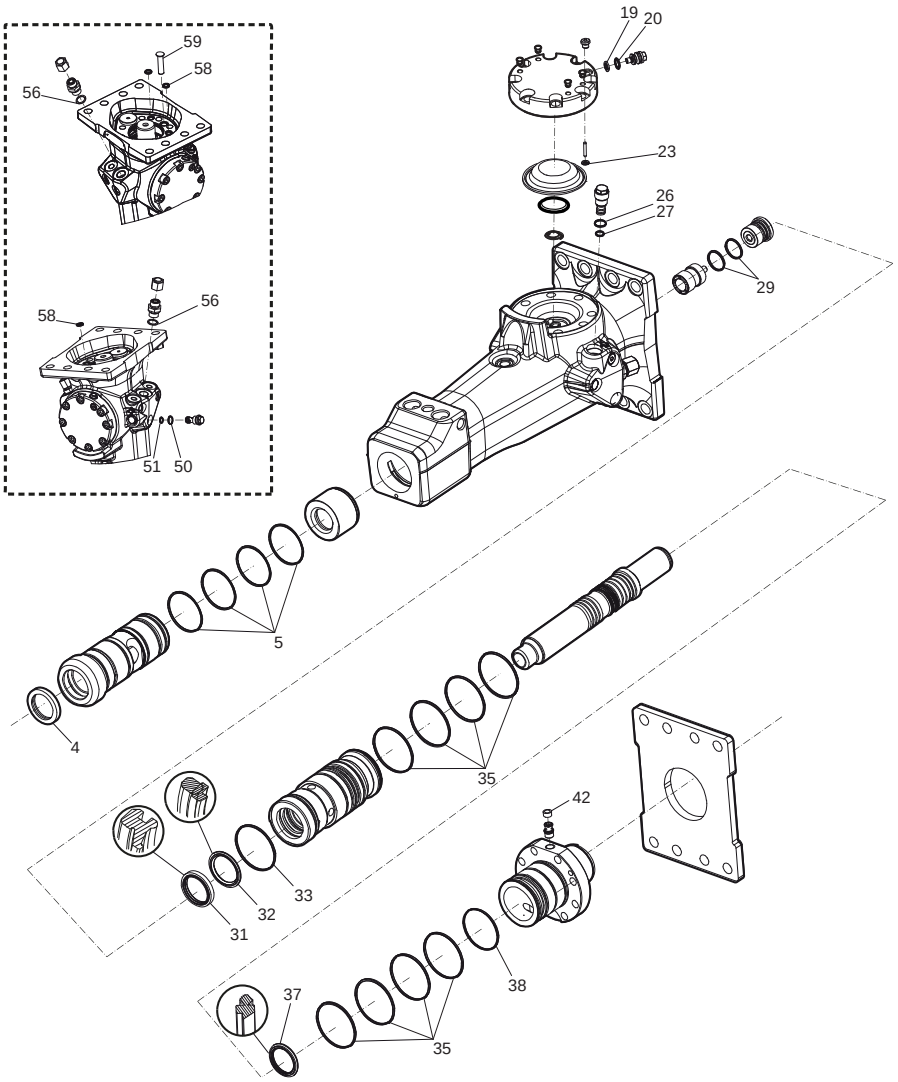

Seal Kit Epiroc part number **3382070208** Crowder SKU EP-3382070208

Kit contents

REF	PART NO.	DESCRIPTION	QTY	NOTES
4	3315356500	Scraper Ring	1	
5	0663210289	O-Ring	4	
19	3115329002	Seal Ring	1	
20	0663212000	O-Ring	1	
23	0663211400	O-Ring	1	
26	0663903201	O-Ring	1	
27	0663905401	O-Ring	1	
29	0663211489	O-Ring	2	
31	0665909961	Wiper	1	
32	3315391001	Piston Rod Seal	1	

REF	PART NO.	DESCRIPTION	QTY	NOTES
33	0663210576	O-Ring	1	
35	0663211254	O-Ring	8	
37	5750533164	Piston Rod Seal	1	
38	0663927900	O-Ring	1	
42	3315280800	Valve Rubber	1	
50	0663903201	O-Ring	1	
51	0663905401	O-Ring	1	
56	0664000003	Seal Ring	2	
58	0665090014	Seal Ring	1	
59	3315305000	Plug	1	