SERVICE DATA

Tightening torques

Ref numbers match the drawing.

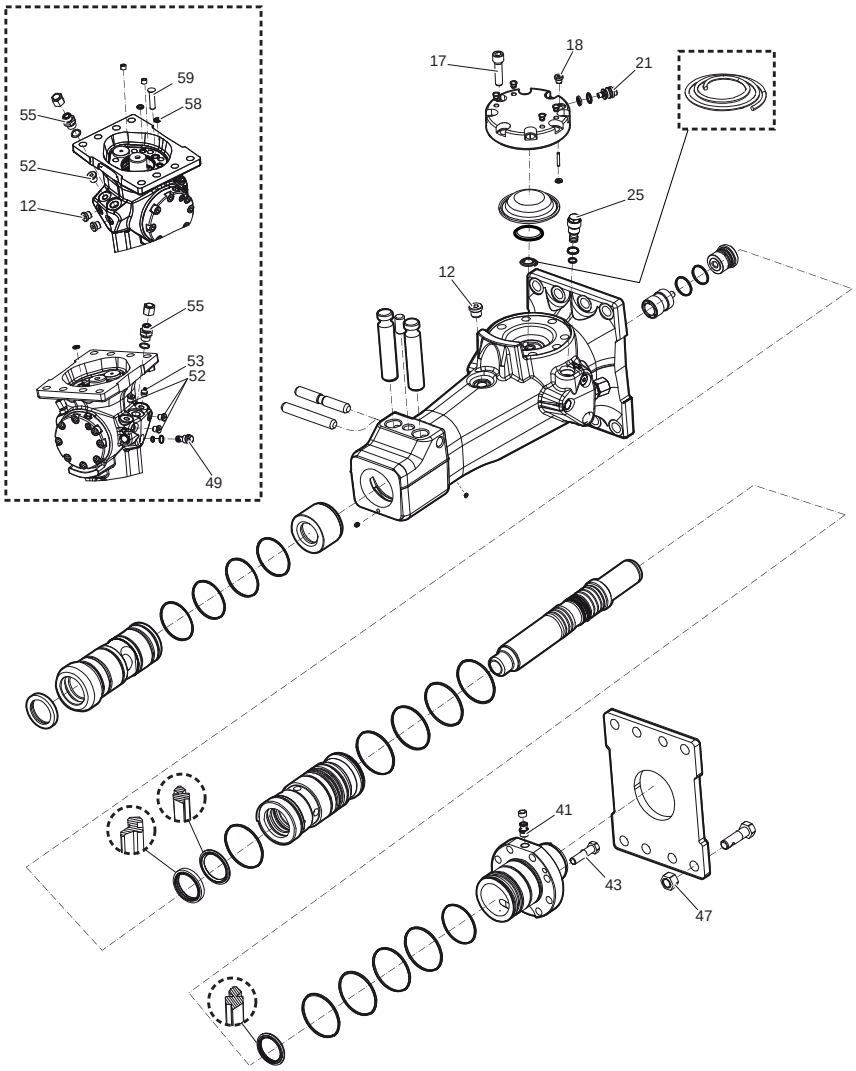

Tightening torques

REF	PART NO.	DESCRIPTION	TORQUE	NOTES
12	0686371801	Plug	80 Nm (59 ft lbf)	LOCTITE® 243™
17	0211196534	Hex Socket Screw	120 Nm (89 ft lbf)	Molykote®
18	0686371805	Plug	20 Nm (15 ft lbf)	
21	3315366000	Valve	27 Nm (20 ft lbf)	
25	—	Valve	60 Nm (44 ft lbf)	
41	—	Check Valve	30 Nm (22 ft lbf)	LOCTITE® 243™
43	0147140503	Screw, Hex Head	75 Nm (55 ft lbf)	Molykote®
47	—	Nut	200 Nm (148 ft lbf)	
49	—	Restrictor	80 Nm (59 ft lbf)	
52	0686644207	Plug	30 Nm (22 ft lbf)	LOCTITE® 243™
53	3360433774	Grease Nipple	30 Nm (22 ft lbf)	
55	—	Nipple	120 Nm (89 ft lbf)	