WORKING TOOLS

Working tools: ClassicLine

Sizes and weights are shown beside each tool in the drawing.

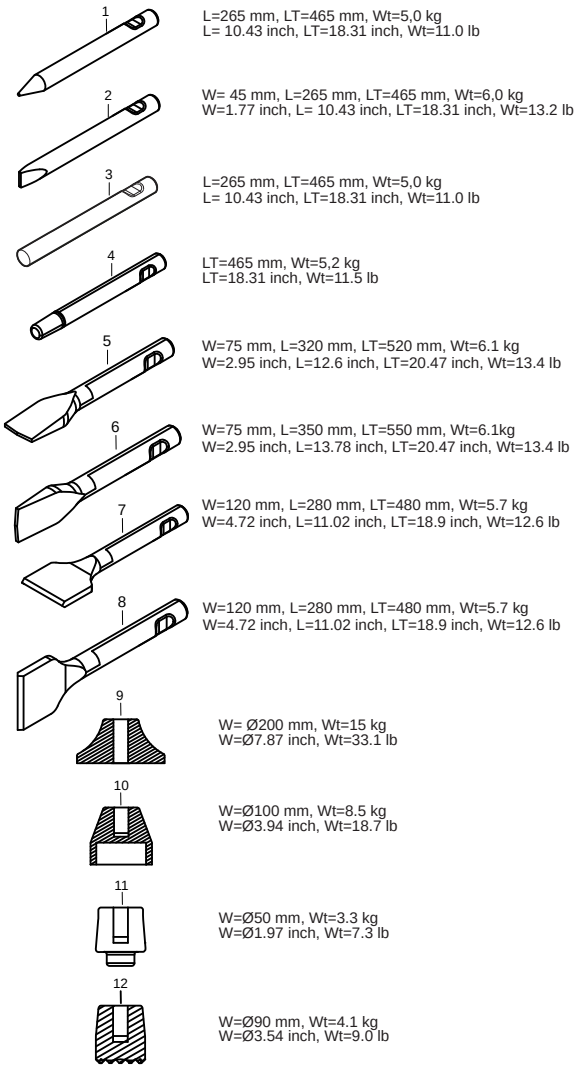

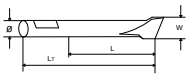

ClassicLine working tools

REF	PART NO.	DESCRIPTION	QTY	NOTES
1	3083342410	Moil Point	1	
2	3083342411	Chisel	1	Cross
3	3083342412	Blunt Tool	1	
4	3315370001	Shaft	1	
5	3083340910	Wide Chisel	1	Cross
6	3083340911	Wide Chisel	1	Parallel
7	3083340912	Asphalt Cutter	1	Cross
8	3083340913	Asphalt Cutter	1	Parallel
9	3315370600	Tamping Pad	1	Square
10	3315371400	Post Driver Pad	1	Round
11	3315372100	Pile Driver Pad	1	Round
12	3315372800	Bushing Pad	1	Round

WORKING TOOLS

Working tools: ProLine

Sizes and weights are shown beside each tool in the drawing.

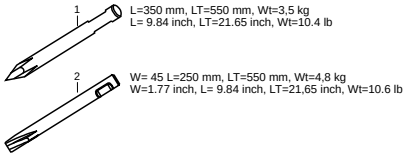

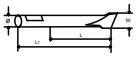

ProLine working tools

REF	PART NO.	DESCRIPTION	QTY	NOTES
1	3363120259	Moil Point	1	X-profile
2	3363120260	Chisel	1	X-profile