SERVICE KIT

Accumulator Repair Kit

Numbers match the callouts in the drawing and on the breaker parts diagram.

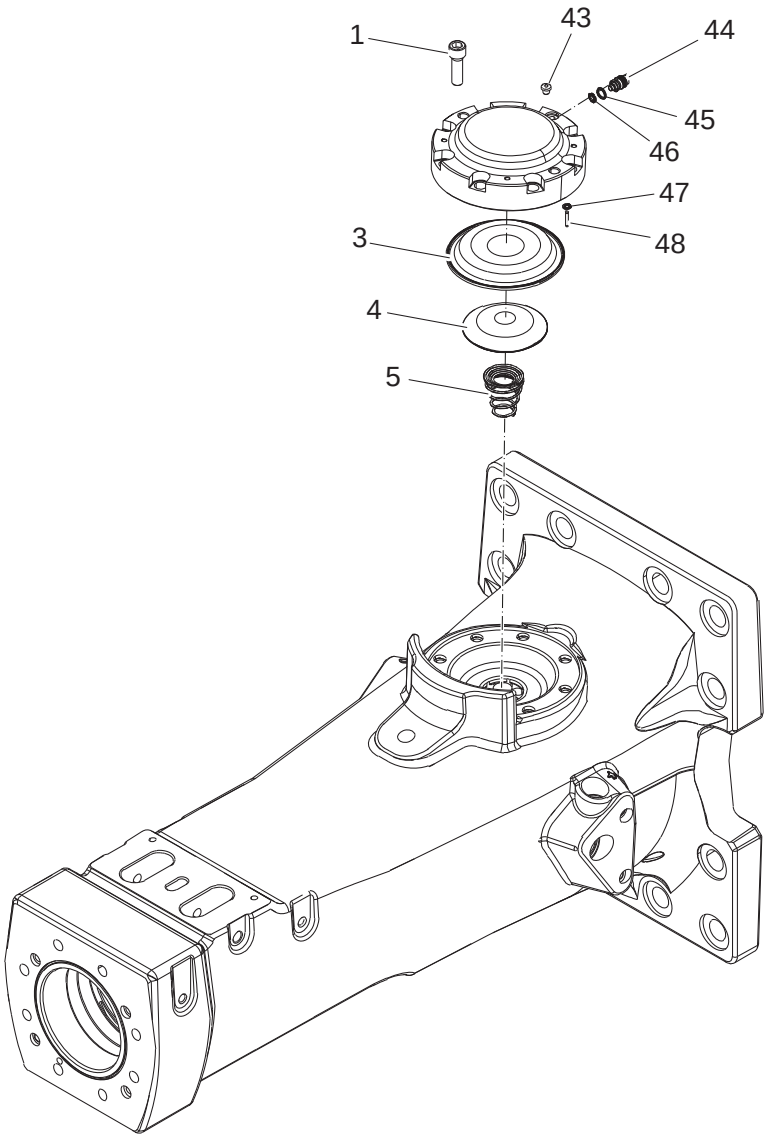

Accumulator Repair Kit Epiroc part number **3382070081** Crowder SKU EP-3382070081

Kit contents

REF	PART NO.	DESCRIPTION	QTY	NOTES
1	0211196544	Hex Socket Screw	8	
3	3315416300	Diaphragm	1	
4	3315414200	Diaphragm Support	1	For diaghragm
5	3315418800	Coil Spring	1	
43	0686371805	Plug	1	

REF	PART NO.	DESCRIPTION	QTY	NOTES
44	3315366000	Valve	1	
45	0663212000	O-Ring	1	
46	3115329002	Seal Ring	1	
47	0663211400	O-Ring	1	
48	0101414000	Pin	1	