SERVICE KIT

Lower Hammer Part Kit

Numbers match the callouts in the drawing and on the breaker parts diagram.

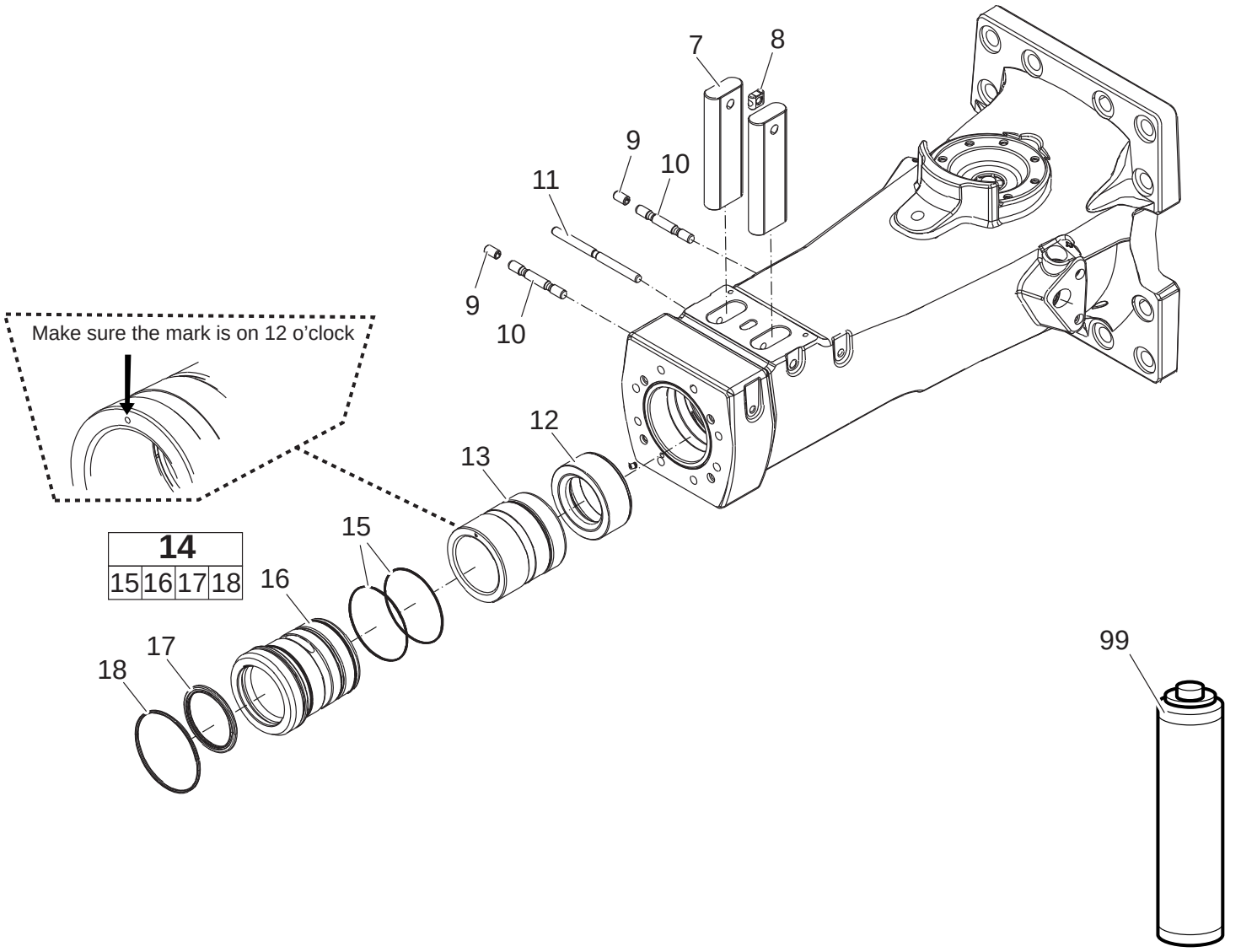

Lower Hammer Part Kit Epiroc part number **3382070082** Crowder SKU EP-3382070082

Kit contents

REF	PART NO.	DESCRIPTION	QTY	NOTES
7	3315412100	Retainer Bar	2	
8	3315141900	Lock Buffer	1	
9	0108110322	Spring Pin	2	
10	3315395700	Locking Pin	2	
11	3315411800	Locking Pin	1	
12	3315411500	Stop Ring	1	
13	3315411600	Wear Bushing	1	
14	3382070085	Wear Bushing	1	Complete; includes 15, 16, 17 and 18
15	0663212001	O-Ring	2	
16	—	Wear Bushing	1	Not sold separately; part of 14
17	3315412200	Scraper Ring	1	
18	0663212002	O-Ring	1	
99	—	Chisel Paste	1	Not sold separately. Bio, cartridge 1 x 400 g (0.88 lbs)