OPTIONAL PARTS

Lower wear bushing, press-fitted

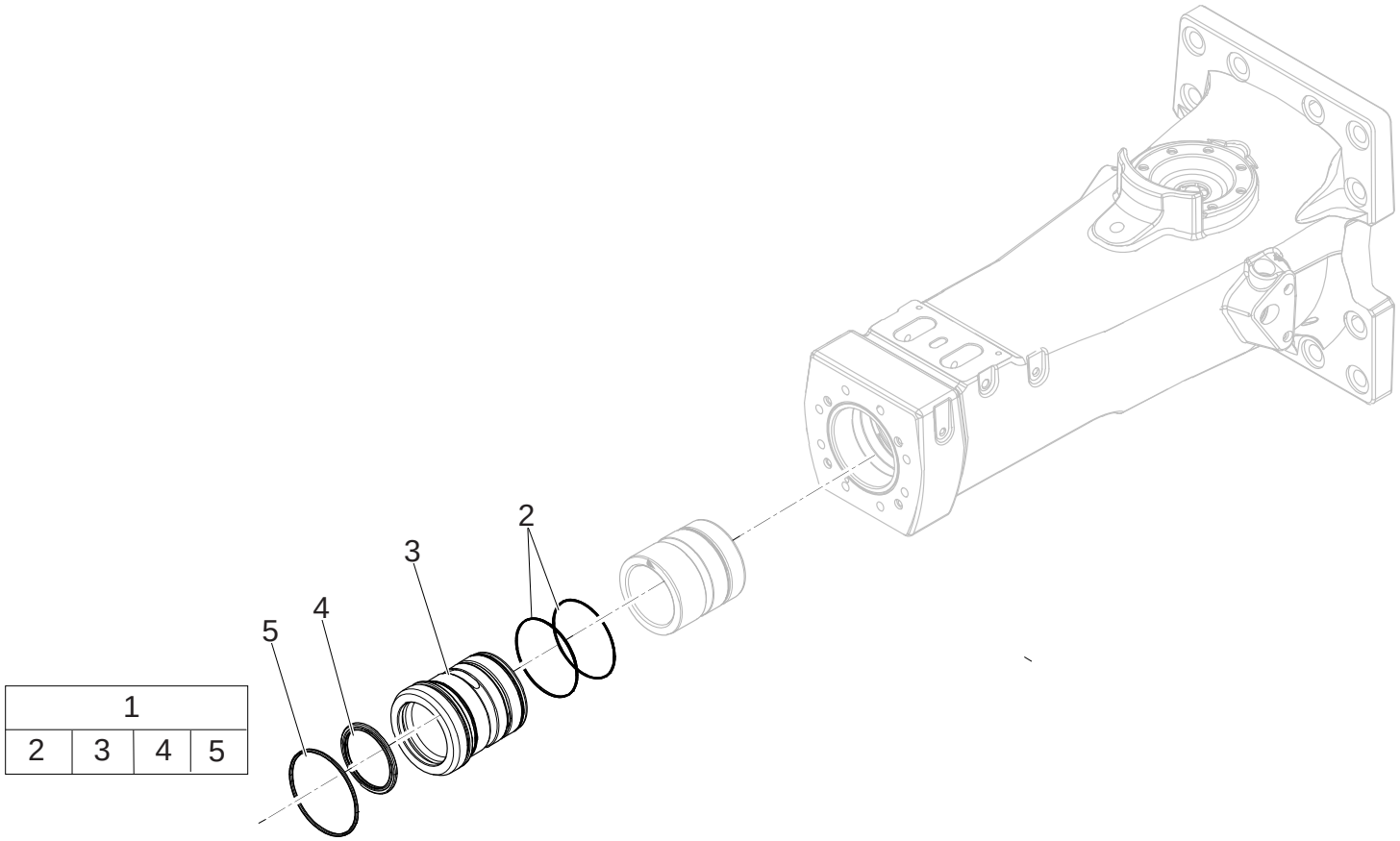

Parts list

REF	PART NO.	DESCRIPTION	QTY	NOTES
1	3315432430	Lower Wear Bushing Pressfitted, Complete	1	Complete; includes 2, 3, 4 and 5
2	0663212001	O-Ring	2	
3	—	Wear Bushing	1	Not sold separately; part of 1
4	3315412200	Scraper Ring	1	
5	0663212002	O-Ring	1	