SERVICE KIT

Seal Kit

Numbers match the callouts in the drawing and on the breaker parts diagram.

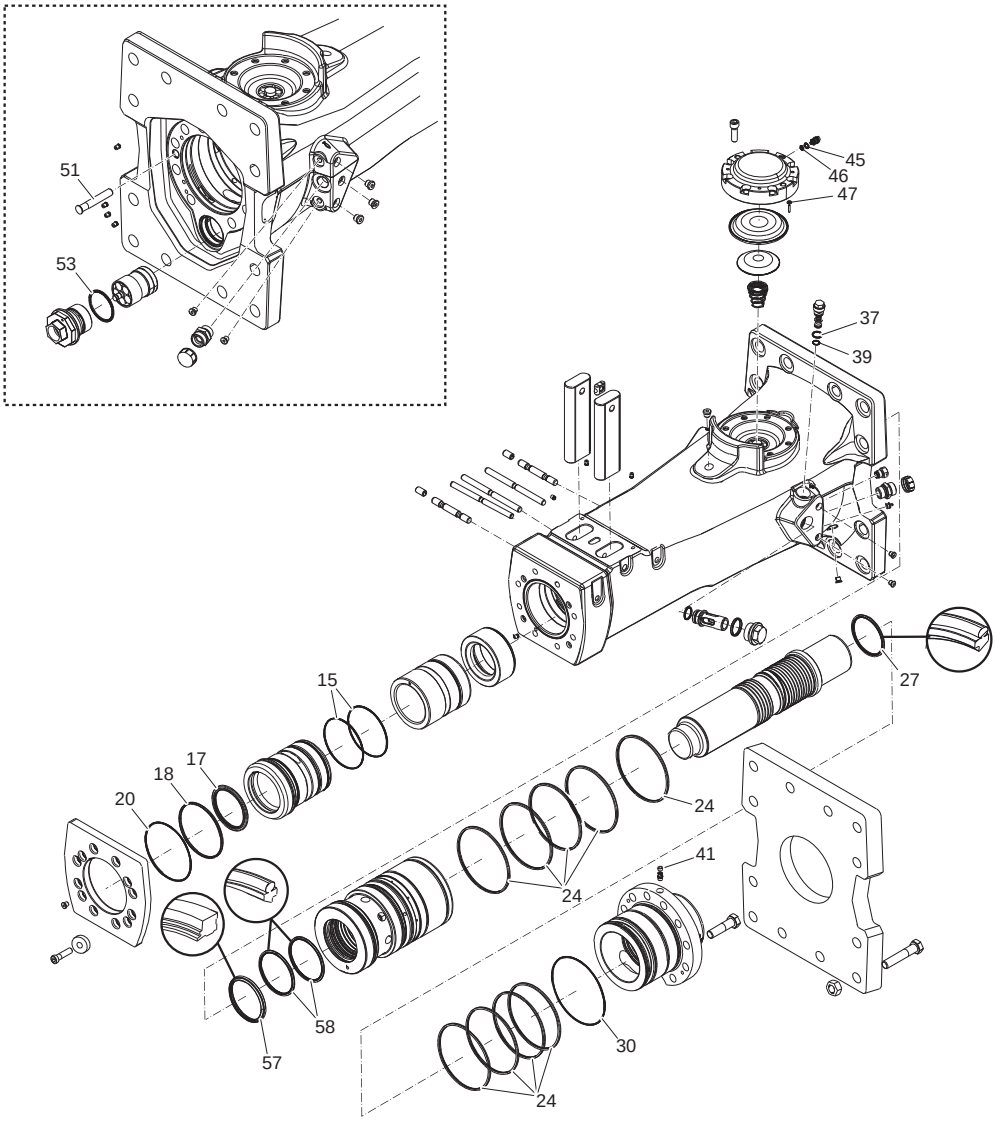

Seal Kit Epiroc part number **3382070080** Crowder SKU EP-3382070080

Kit contents

REF	PART NO.	DESCRIPTION	QTY	NOTES
15	0663212001	O-Ring	2	
17	3315412200	Scraper Ring	1	
18	0663212002	O-Ring	1	
20	0663211999	O-Ring	1	
24	0663990045	Seal	9	
27	0665070175	Piston Rod Seal	1	
30	0663212003	O-Ring	1	
37	0663910401	O-Ring	1	
39	0663903201	O-Ring	1	

REF	PART NO.	DESCRIPTION	QTY	NOTES
41	3315280800	Valve Rubber	1	
45	0663212000	O-Ring	1	
46	3115329002	Seal Ring	1	
47	0663211400	O-Ring	1	
51	3315412300	Plug	1	
53	0663990049	Stircomatic Seal	1	
57	3315411320	Wiper	1	
58	0665070174	Piston Rod Seal	2	