SERVICE DATA

Tightening torques

Ref numbers match the drawing.

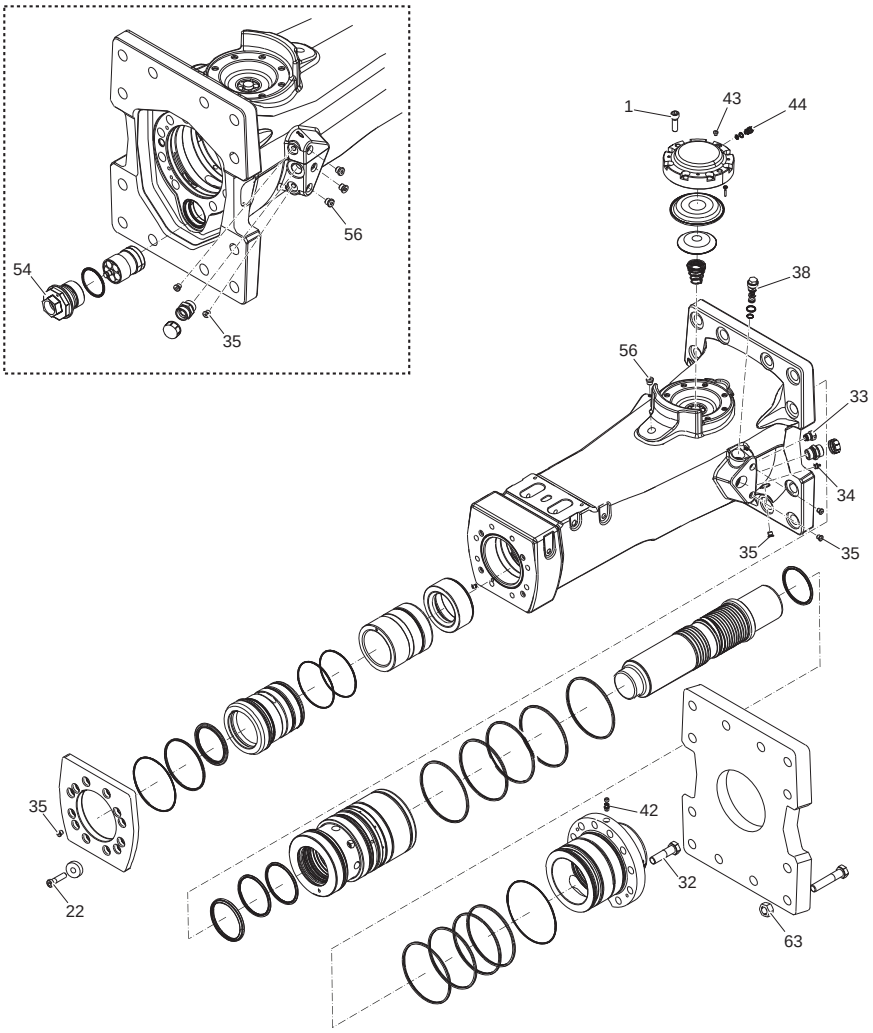

Tightening torques

REF	PART NO.	DESCRIPTION	TORQUE	NOTES
1	0211196544	Hex Socket Screw	370 Nm (273 ft lbf)	
22	3315431101	Hex Socket Screw	180 Nm (133 ft lbf)	Molykote®
32	0147163803	Screw, Hex Head	550 Nm (406 ft lbf)	
33	3363109435	Valve	200 Nm (148 ft lbf)	
34	3360433774	Grease Nipple	30 Nm (22 ft lbf)	
35	0686644207	Plug	30 Nm (22 ft lbf)	LOCTITE® 243™
38	—	Valve	80 Nm (59 ft lbf)	
42	—	Check Valve	80 Nm (59 ft lbf)	
43	0686371805	Plug	20 Nm (15 ft lbf)	
44	3315366000	Valve	30 Nm (22 ft lbf)	LOCTITE® 243™
54	3315413900	Valve Cover	2000 Nm (1475 ft lbf)	Molykote®
56	0686371801	Plug	80 Nm (59 ft lbf)	
63	0266113601	Nut	1385 Nm (1022 ft lbf)	, use Molykote®