OPTIONAL PARTS

Oversize bushings

Oversize bushings for worn breaker bodies.

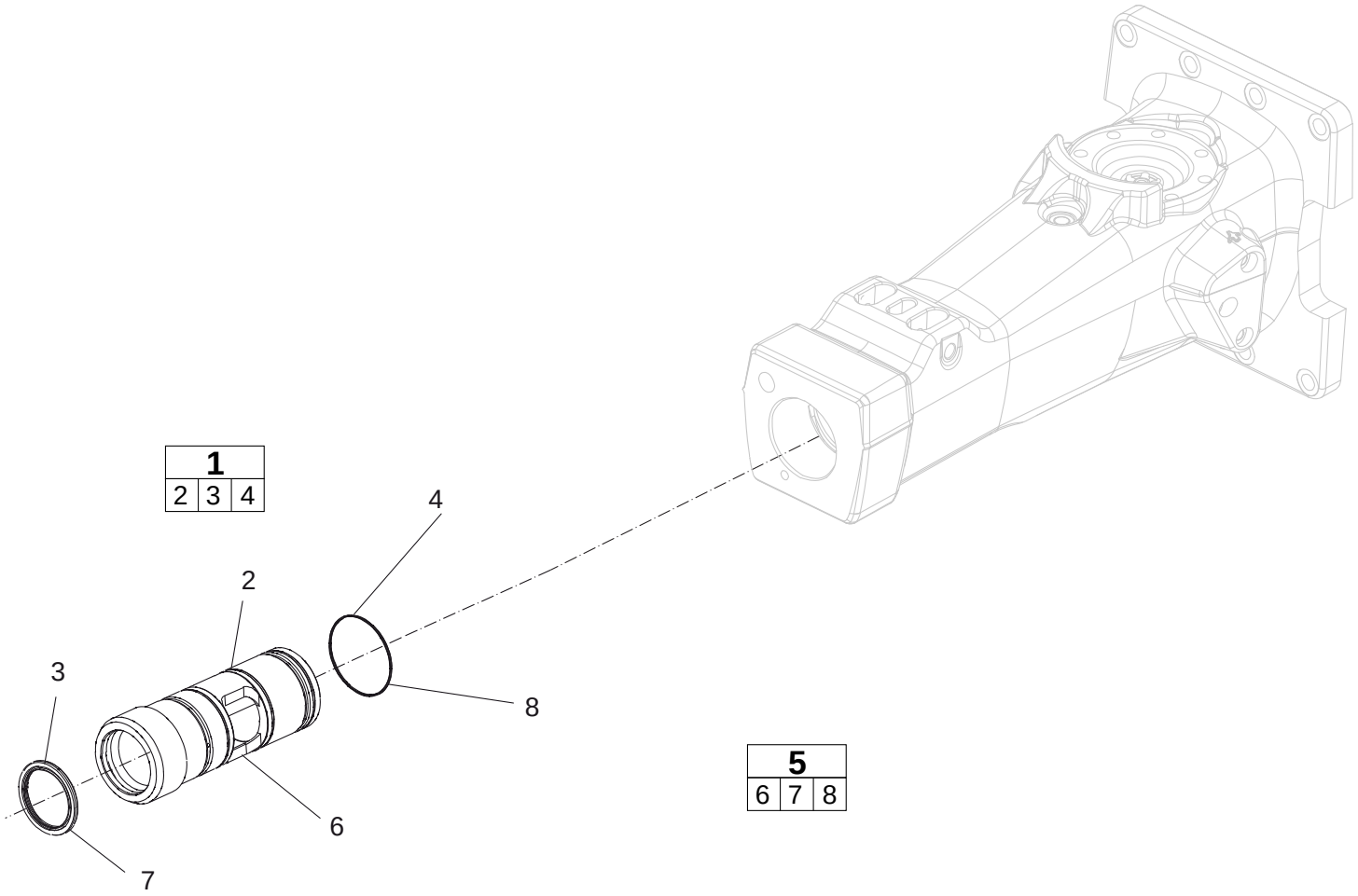

Parts list

REF	PART NO.	DESCRIPTION	QTY	NOTES
1	3382070195	Bushing	1	Complete; includes 2, 3 and 4
2	—	Bushing	1	Not sold separately; part of 1. Ø 91.5 mm (Ø 3.6 in.)
3	3315356200	Scraper Ring	1	
4	0663210498	O-Ring	1	
5	3382070196	Bushing	1	Complete; includes 6, 7 and 8
6	—	Bushing	1	Not sold separately; part of 5. Ø 93 mm (Ø 3.7 in.)
7	3315356200	Scraper Ring	1	
8	0663210498	O-Ring	1	