SERVICE KIT

Lower Hammer Part Kit

Numbers match the callouts in the drawing and on the breaker parts diagram.

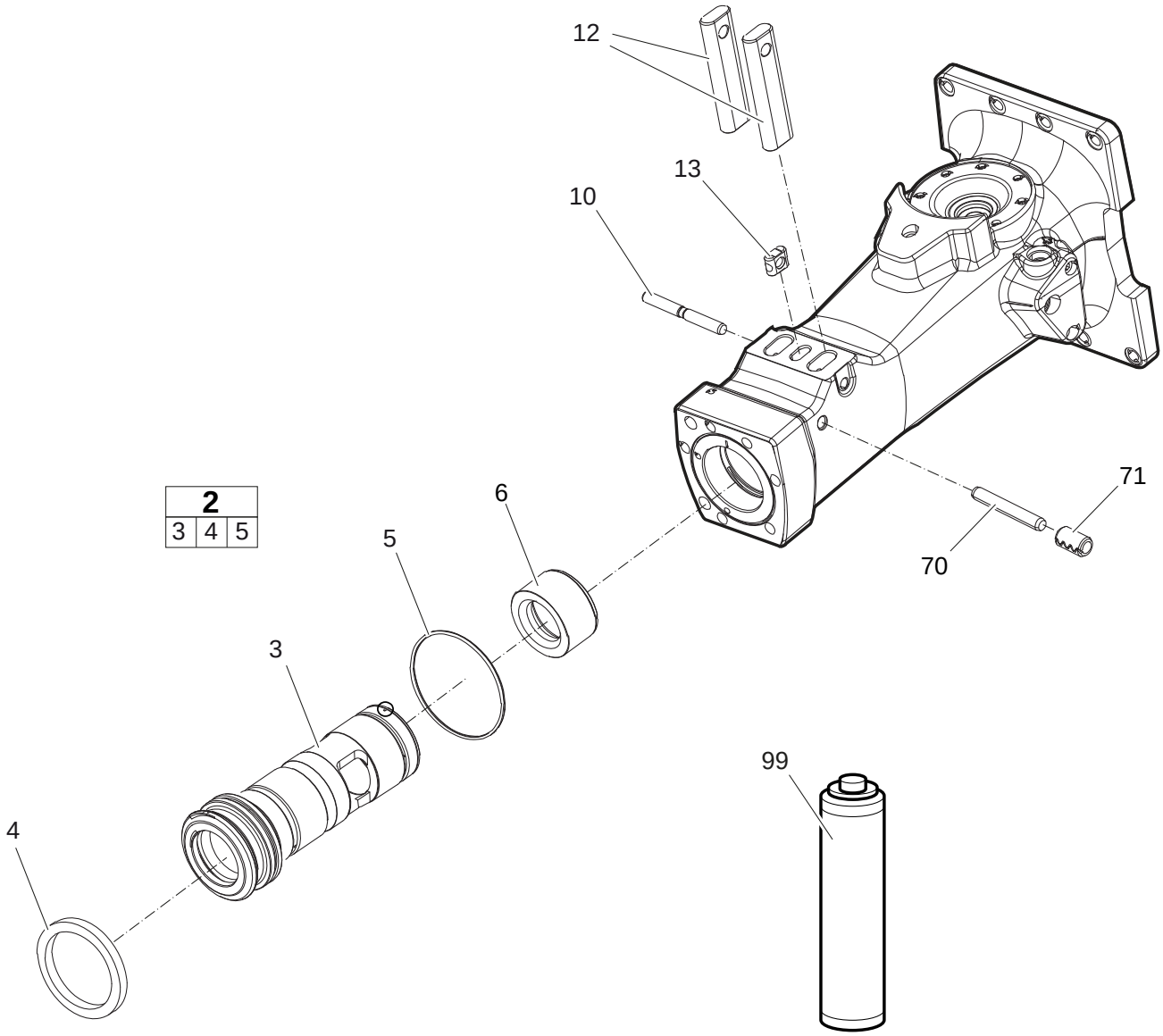

Lower Hammer Part Kit Epiroc part number **3382070194** Crowder SKU EP-3382070194

Kit contents

REF	PART NO.	DESCRIPTION	QTY	NOTES
2	3382070192	Bushing	1	Complete; includes 3, 4 and 5
3	—	Bushing	1	Not sold separately; part of 2. Ø 90 mm (Ø 3.54 in.)
4	3315356200	Scraper Ring	1	
5	0663210498	O-Ring	1	
6	3315277800	Stop Ring	1	
10	3315135010	Lock Pin	1	

REF	PART NO.	DESCRIPTION	QTY	NOTES
12	3315134910	Retainer Bar	1	
13	3315141900	Lock Buffer	1	
70	3315434910	Bushing Pin	1	
71	0108110322	Spring Pin	1	
99	—	Chisel Paste	1	Not sold separately. Bio, cartridge 1 x 400 g (0.88 lbs)