OPTIONS AND ACCESSORIES

Optional equipment

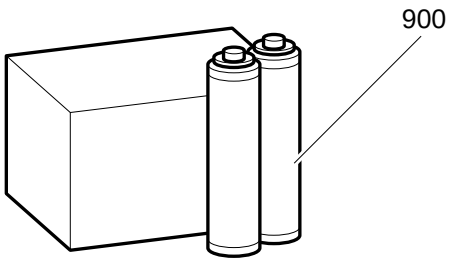

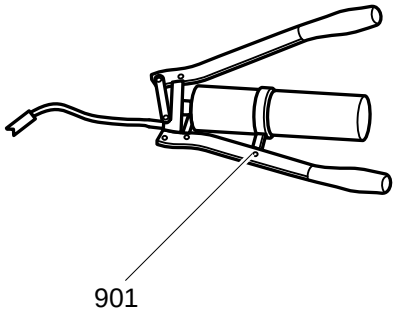

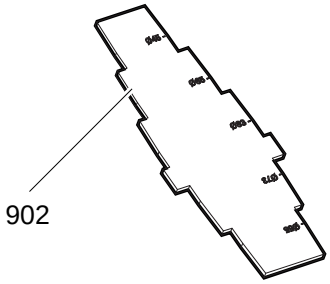

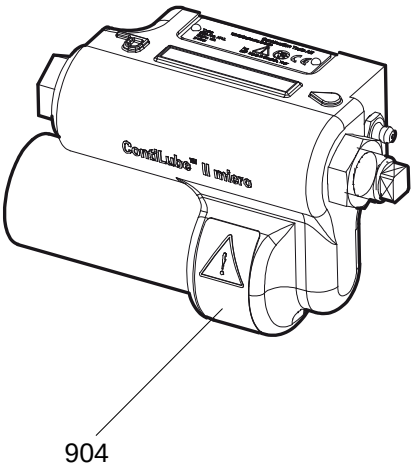

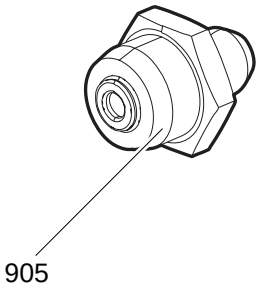

Parts list

REF	PART NO.	DESCRIPTION	QTY	NOTES
900	3363122354	Chisel Paste	1	Bio, 20 x 150 g (0.33 lb
900	3363122355	Chisel Paste	1	Bio, for grease gun 12 x 400 g (0.88 lbs)
	3363122357	Chisel Paste	1	Bio, container 15 kg (33 lbs)
	3363122358	Chisel Paste	1	Bio, container 45 kg (99 lbs)
	3363094669	Filling Device	1	
	3363066411	Filling Device	1	
	3315383980	Filling Adapter	1	
901	0909107100	Lubrication Gun	1	
902	3315353100	Controller	1	For bushing
904	3315383190	Automatic Lubrication System	1	ContiLube II Micro
905	3363094459	Nipple	1	For charging the accumulator
	3360920415	Filling Device	1	For accumulator
	3361329803	Filling Hose	1	For charging the accumulator
	3315386780	Welding Kit	1	Universal
	3315386280	Hose Kit,	1	Universal