OPTIONAL PARTS

Restrictors

Alternative restrictor sizes for different carrier oil flows.

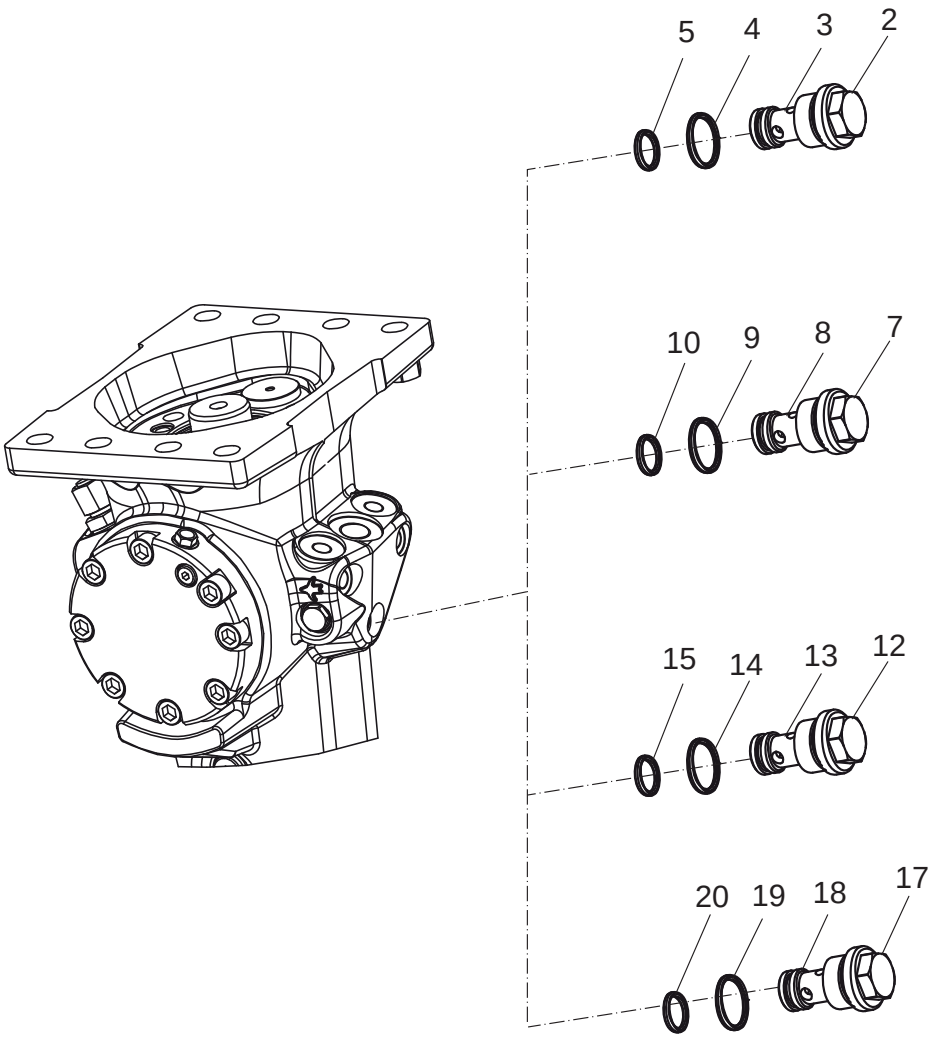

1			
2	3	4	5

6			
7	8	9	10

11			
12	13	14	15

16			
17	18	19	20

Parts list

REF	PART NO.	DESCRIPTION	QTY	NOTES
1	3315369460	Restrictor	1	Complete
2	3315369200	Restrictor Plug	1	
3	—	Restrictor	1	Not sold separately. Ø 6.0 mm (Ø 0.24 in.)
4	9125621100	O-Ring	1	
5	0663210421	O-Ring	1	
6	3315369454	Restrictor	1	Complete
7	3315369200	Restrictor Plug	1	
8	—	Restrictor	1	Not sold separately. Ø 5.4 mm (Ø 0.21 in.)
9	9125621100	O-Ring	1	
10	0663210421	O-Ring	1	

REF	PART NO.	DESCRIPTION	QTY	NOTES
11	3315369450	Restrictor	1	Complete (optional)
12	3315369200	Restrictor Plug	1	
13	—	Restrictor	1	Not sold separately. Ø 5.0 mm (Ø 0.20 in.)
14	0663212141	O-Ring	1	
15	0663210421	O-Ring	1	
16	3315369445	Restrictor	1	Complete (optional)
17	3315369200	Restrictor Plug	1	
18	—	Restrictor	1	Not sold separately. Ø 4.5 mm (Ø 0.18 in.)
19	0663212141	O-Ring	1	
20	0663210421	O-Ring	1	