SERVICE KIT

Seal Kit

Numbers match the callouts in the drawing and on the breaker parts diagram.

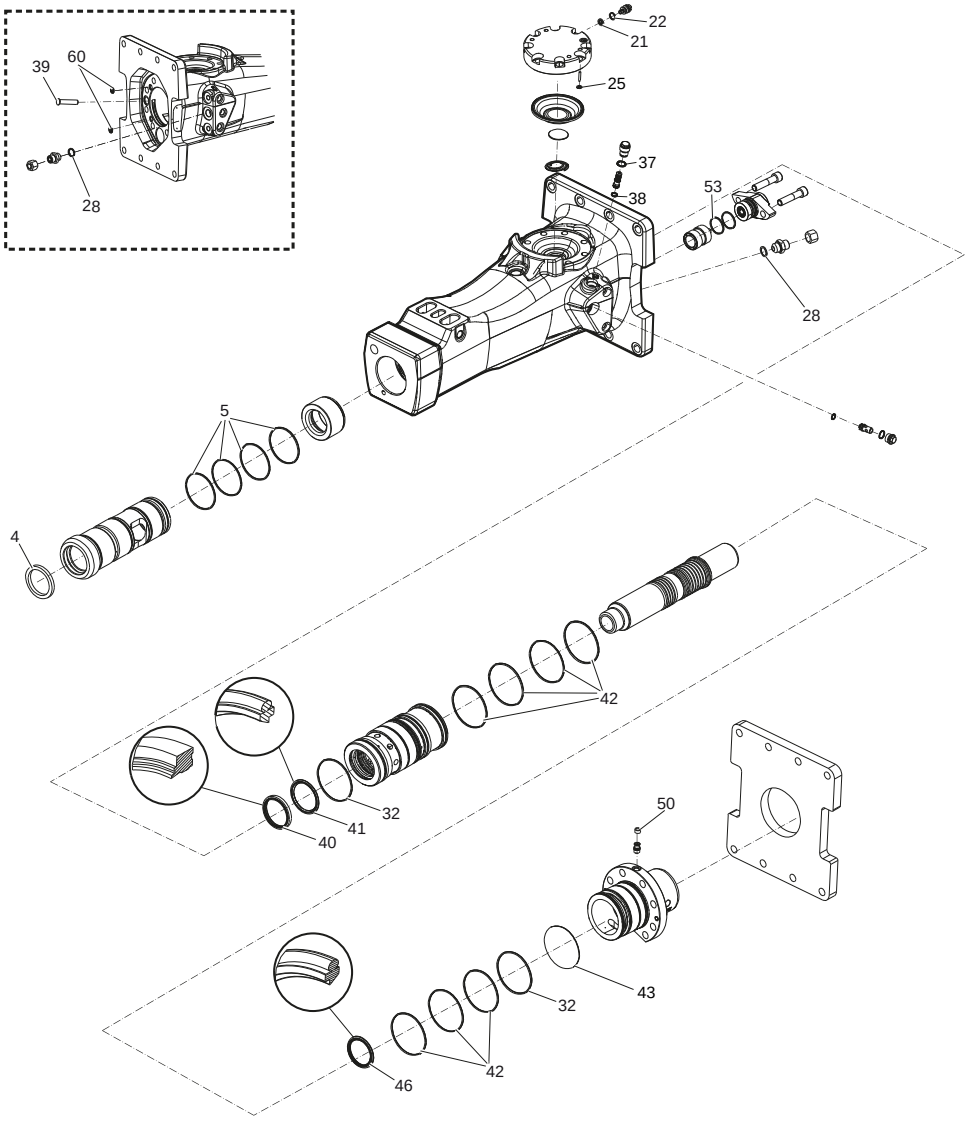

Seal Kit Epiroc part number **3382070079** Crowder SKU EP-3382070079

Kit contents

REF	PART NO.	DESCRIPTION	QTY	NOTES
4	3315356200	Scraper Ring	1	
5	0663210498	O-Ring	4	
21	3115329002	Seal Ring	1	
22	0663212000	O-Ring	1	
25	0663211400	O-Ring	1	
28	0664000003	Seal Ring	2	
32	0663990036	Seal Ring	2	
37	0663903201	O-Ring	1	
38	0663905401	O-Ring	1	

REF	PART NO.	DESCRIPTION	QTY	NOTES
39	3315336700	Plug	1	
40	0665909956	Wiper	1	
41	0665070130	Piston Rod Seal	1	
42	0663210494	O-Ring	7	
43	0663211516	O-Ring	1	
46	0665070129	Piston Rod Seal	1	
50	3315280800	Valve Rubber	1	
53	0663211444	O-Ring	2	
60	0665090014	Seal Ring	2	