SERVICE DATA

Tightening torques

Ref numbers match the drawing.

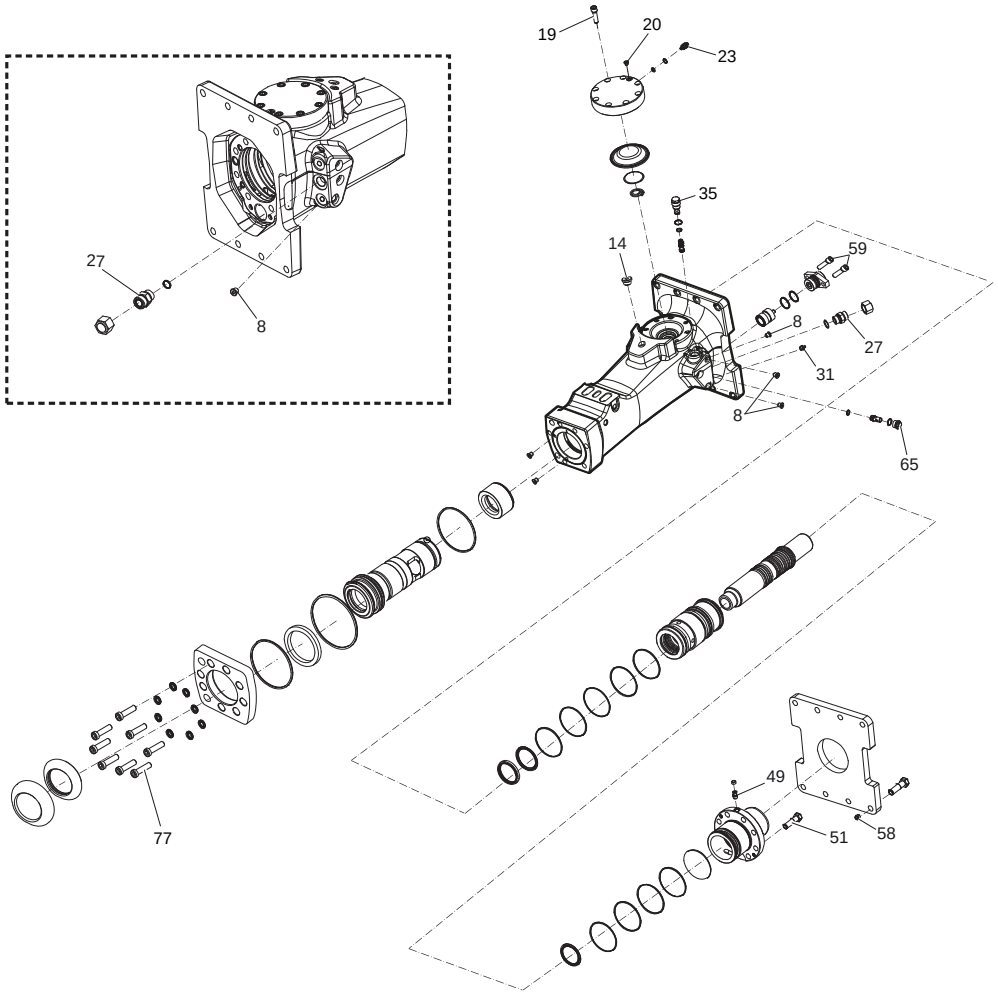

Tightening torques

REF	PART NO.	DESCRIPTION	TORQUE	NOTES
8	0686644207	Plug	30 Nm (22 ft lbf)	LOCTITE® 243™
14	0686371803	Plug	80 Nm (59 ft lbf)	LOCTITE® 243™
19	0211196534	Hex Socket Screw	120 Nm (89 ft lbf)	Molykote®
20	0686371805	Plug	20 Nm (15 ft lbf)	
23	3315366000	Valve	27 Nm (20 ft lbf)	
27	—	Nipple	120 Nm (89 ft lbf)	
31	3360433774	Grease Nipple	30 Nm (22 ft lbf)	
35	—	Valve	60 Nm (44 ft lbf)	
49	—	Check Valve	30 Nm (22 ft lbf)	LOCTITE® 243™
51	0147148103	Screw, Hex Head	180 Nm (133 ft lbf)	Molykote®
58	—	Nut	200 Nm (148 ft lbf)	Molykote®
59	0211110349	Screw	180 Nm (133 ft lbf)	
65	3315369200	Restrictor Plug	80 Nm (59 ft lbf)	
77	3315431100	Screw	240 Nm (177 ft lbf)	