OPTIONAL PARTS

Oversize bushings

Oversize bushings for worn breaker bodies.

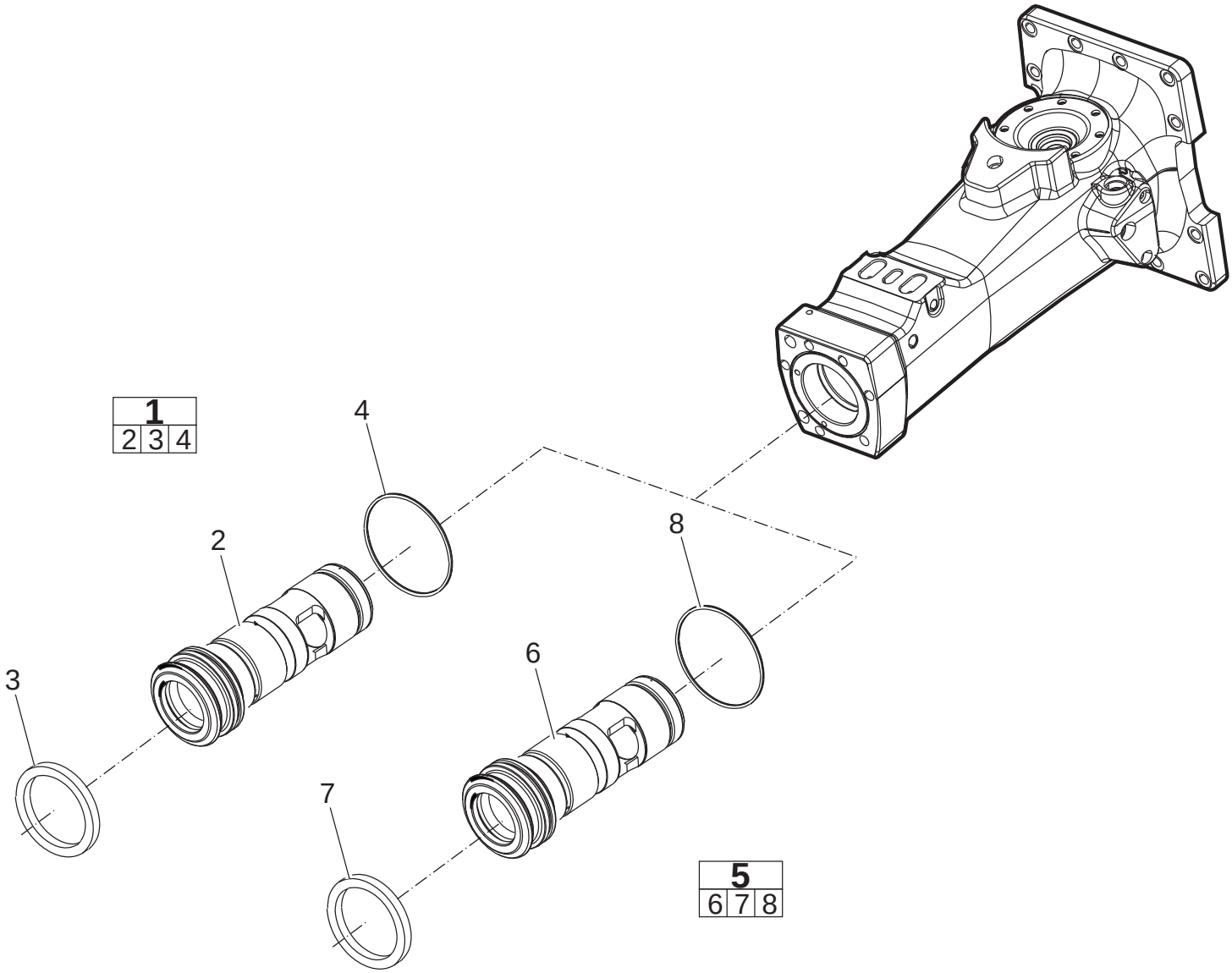

Parts list

REF	PART NO.	DESCRIPTION	QTY	NOTES
1	3315434261	Bushing	1	Complete
2	—	Bushing	1	Not sold separately. Ø 111.5 mm (Ø 4.39 in.)
3	3315325000	Scraper Ring	1	
4	0663210617	O-Ring	1	
5	3315434262	Bushing	1	Complete
6	—	Bushing	1	Not sold separately. Ø 113 mm (Ø 4.4 in.)
7	0663210617	O-Ring	1	
8	3315325000	Scraper Ring	1	