SERVICE KIT

# Lower Hammer Part Kit

Numbers match the callouts in the drawing and on the breaker parts diagram.

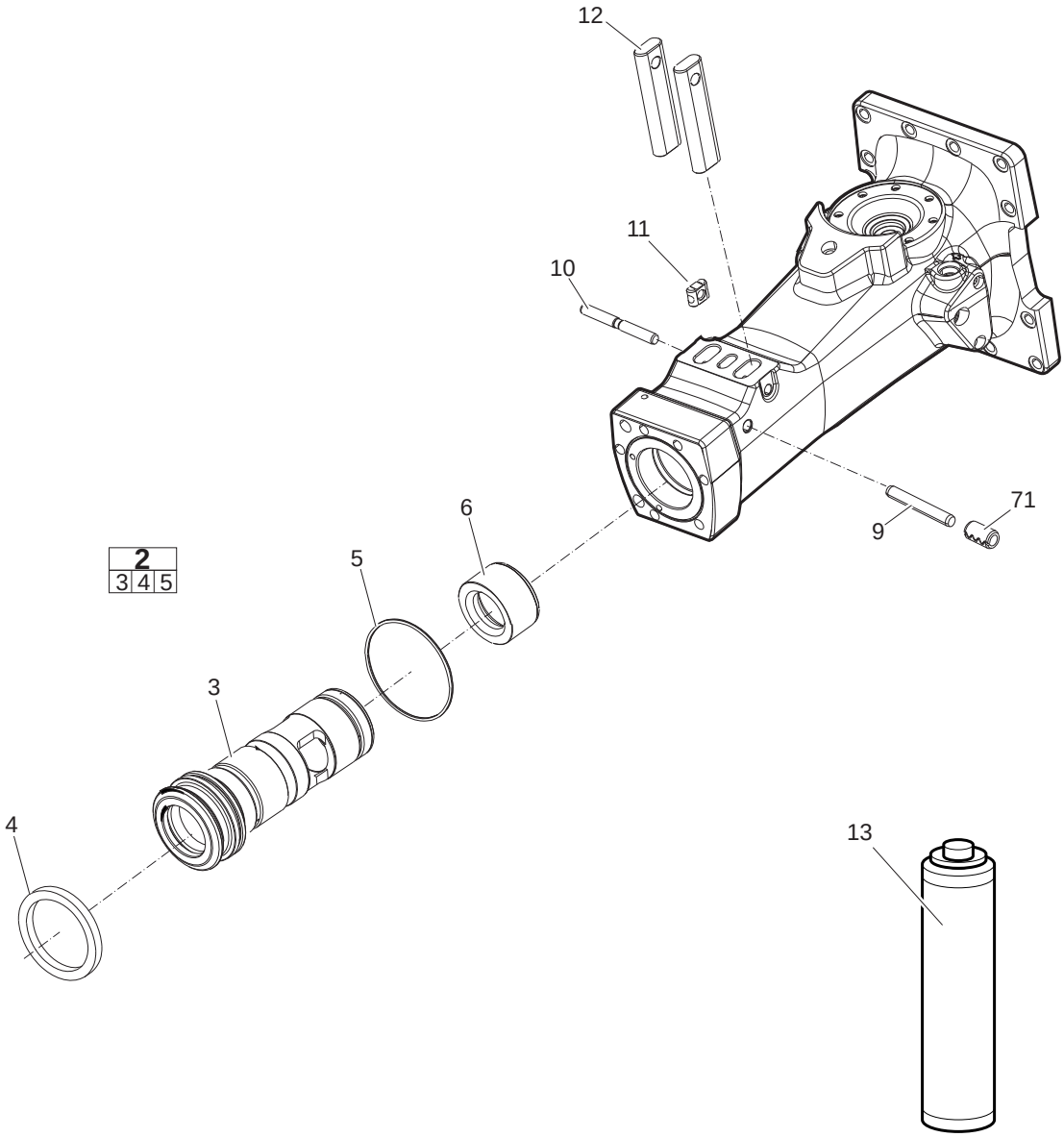


**Lower Hammer Part Kit** Epiroc part number **3382070104** Crowder SKU EP-3382070104

## Kit contents

| REF | PART NO. | DESCRIPTION | QTY | NOTES |
|---|---|---|---|---|
| 2 | 3315434260 | Bushing | 1 | Complete; includes 3, 4 and 5 |
| 3 | — | Bushing | 1 | Not sold separately; part of 2 |
| 4 | 3315325000 | Scraper Ring | 1 | |
| 5 | 0663210617 | O-Ring | 1 | |
| 6 | 3315301400 | Stop Ring | 1 | |
| 9 | 3315434900 | Bushing Pin | 1 | |

| REF | PART NO. | DESCRIPTION | QTY | NOTES |
|---|---|---|---|---|
| 10 | 3315203110 | Lock Pin | 1 | |
| 11 | 3315141900 | Lock Buffer | 1 | |
| 12 | 3315203010 | Retainer Bar | 2 | |
| 13 | — | Chisel Paste | 1 | Not sold separately. Bio, cartridge 1 x 400 g (0.88 lbs) |
| 71 | 0108110322 | Spring Pin | 1 | |