OPTIONAL PARTS

Restrictors

Alternative restrictor sizes for different carrier oil flows.

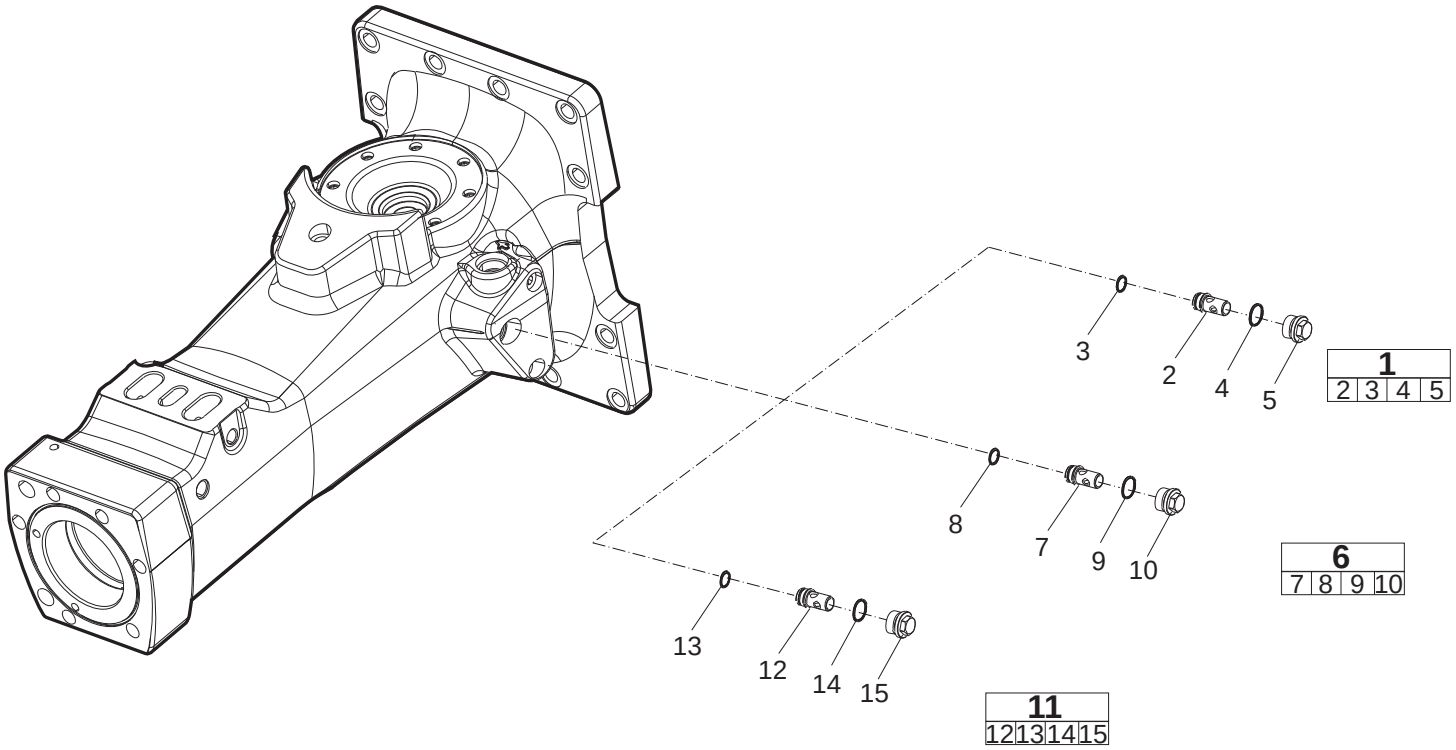

Parts list

REF	PART NO.	DESCRIPTION	QTY	NOTES
1	3315369454	Restrictor	1	Complete
2	—	Restrictor	1	Not sold separately. Ø 5.4 mm (Ø 0.21 in.)
3	0663210421	O-Ring	1	
4	0663212141	O-Ring	1	
5	3315369200	Restrictor Plug	1	
6	3315369460	Restrictor	1	Complete
7	—	Restrictor	1	Not sold separately. Ø 6.0 mm (Ø 0.24 in.)
8	0663210421	O-Ring	1	
9	0663212141	O-Ring	1	
10	3315369200	Restrictor Plug	1	
11	3315369464	Restrictor	1	Complete
12	—	Restrictor	1	Not sold separately. Ø 6.4 mm (Ø 0.25 in.)
13	0663210421	O-Ring	1	
14	0663212141	O-Ring	1	
15	3315369200	Restrictor Plug	1	