SERVICE KIT

Seal Kit

Numbers match the callouts in the drawing and on the breaker parts diagram.

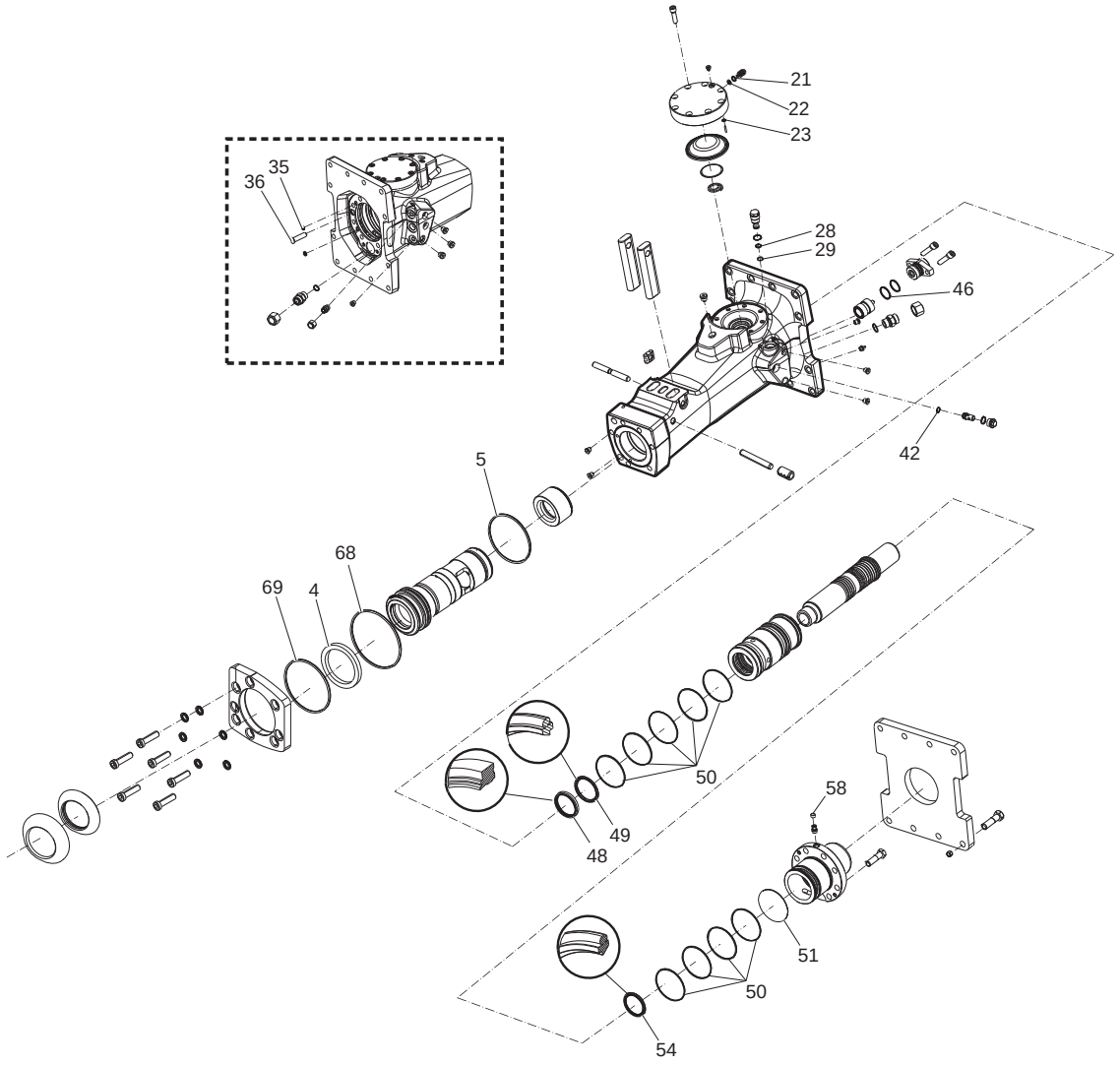

Seal Kit Epiroc part number **3382070102** Crowder SKU EP-3382070102

Kit contents

REF	PART NO.	DESCRIPTION	QTY	NOTES
4	3315325000	Scraper Ring	1	
5	0663210617	O-Ring	1	
21	0663212000	O-Ring	1	
22	3115329002	Seal Ring	1	
23	0663211400	O-Ring	1	
28	0663210421	O-Ring	1	
29	0661200401	Back-Up Ring	1	
35	0665090014	Seal Ring	2	
36	3315336700	Plug	1	
42	0663210421	O-Ring	1	

REF	PART NO.	DESCRIPTION	QTY	NOTES
46	0663211444	O-Ring	2	
48	0665909957	Wiper	1	
49	0665070137	Piston Rod Seal	1	
50	0663990031	Seal Ring	9	
51	0663210669	O-Ring	1	
54	0665070146	Piston Rod Seal	1	
58	3315280800	Valve Rubber	1	
68	0663210785	O-Ring	1	
69	0663210713	O-Ring	1	
	9125621100	O-Ring	2	