SERVICE KIT

Accumulator Repair Kit

Numbers match the callouts in the drawing and on the breaker parts diagram.

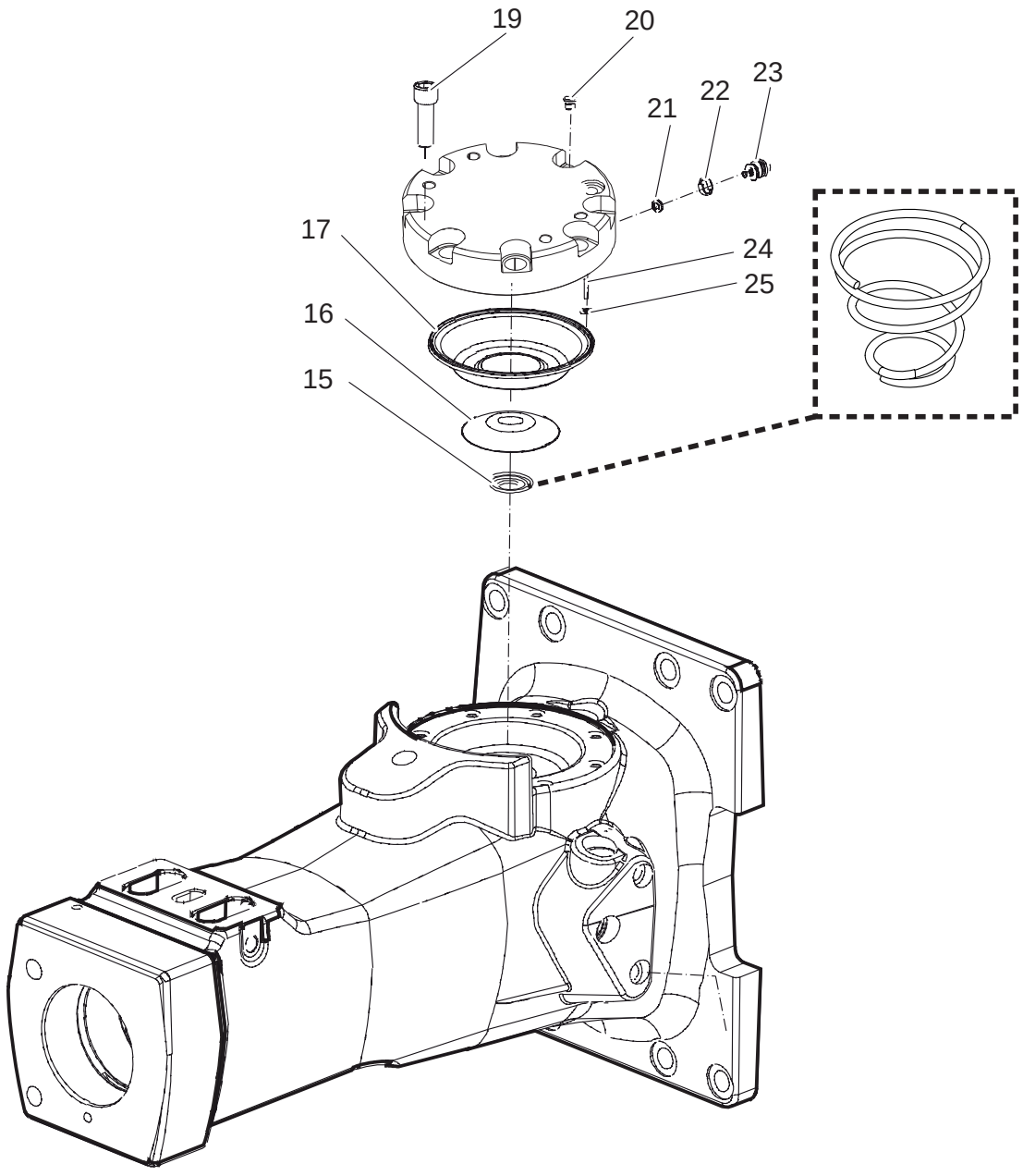

Accumulator Repair Kit Epiroc part number **3315303190** Crowder SKU EP-3315303190

Kit contents

REF	PART NO.	DESCRIPTION	QTY	NOTES
15	3315303500	Coil Spring	1	
16	3315303201	Diaphragm Support	1	
17	3315416300	Diaphragm	1	
19	0211196544	Hex Socket Screw	8	
20	0686371805	Plug	1	

REF	PART NO.	DESCRIPTION	QTY	NOTES
21	3115329002	Seal Ring	1	
22	0663212000	O-Ring	1	
23	3315366000	Valve	1	
24	0101414000	Pin	1	
25	0663211400	O-Ring	1	