SERVICE DATA

Assembly instruction

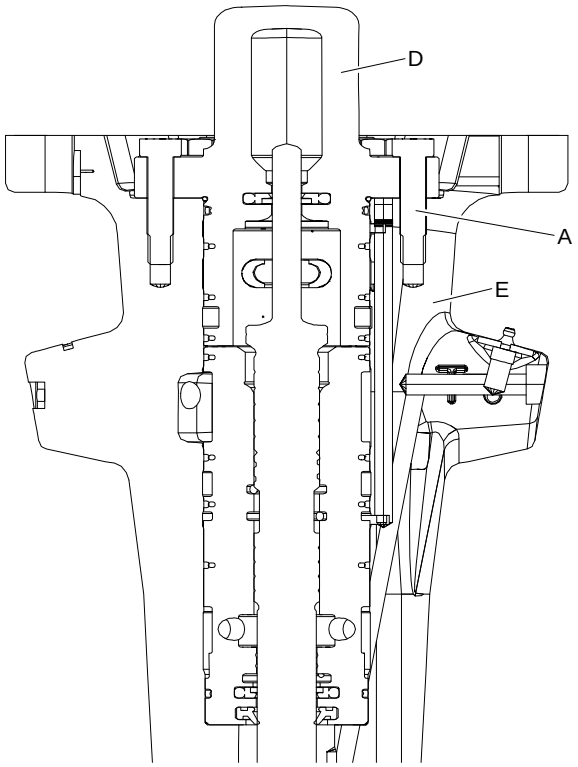

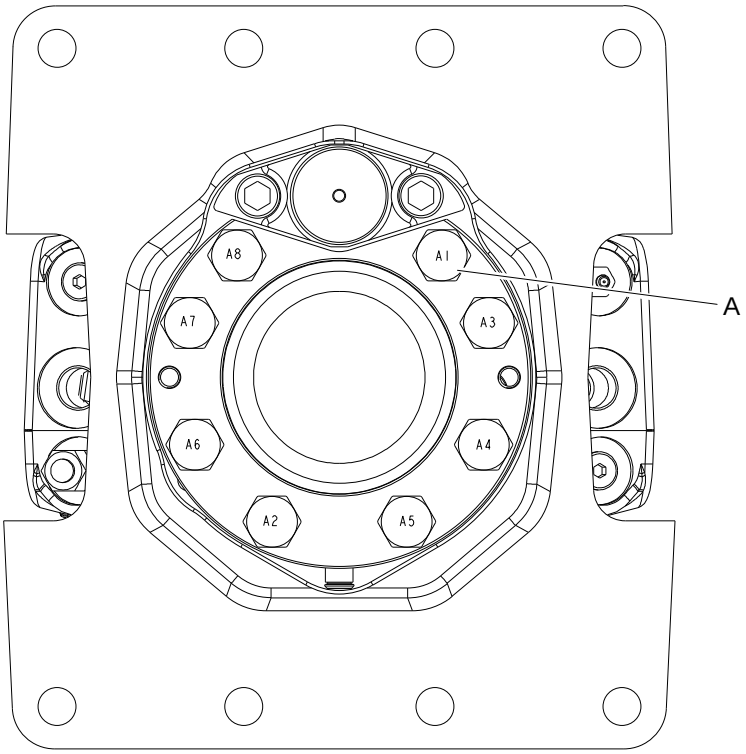

1. Press the back head (D) down on the hammer body(E).
2. Grease the screws (A) with Molykote® 1000 (Molykote is a registered trademark of Dow Corning Corporation), and manually fit them on the back head (D)
3. Torque the screws (A) in the order from A1 to A8.