OPTIONAL PARTS

Restrictors

Alternative restrictor sizes for different carrier oil flows.

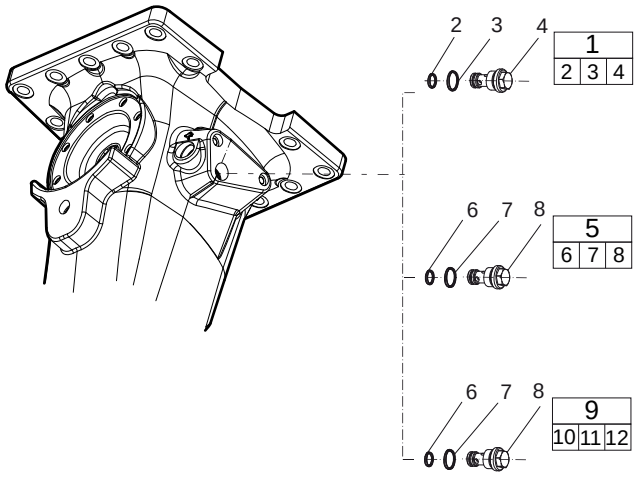

Parts list

REF	PART NO.	DESCRIPTION	QTY	NOTES
1	3315369635	Restrictor	1	Complete
2	0663210421	O-Ring	1	
3	0663212141	O-Ring	1	
4	—	Restrictor	1	Not sold separately. Ø 6.0 mm (Ø 0.24 in.)
5	3315369645	Restrictor	1	Complete
6	0663210421	O-Ring	1	
7	0663212141	O-Ring	1	
8	—	Restrictor	1	Not sold separately. Ø 6.7 mm (Ø 0.26 in.)
9	3315369653	Restrictor	1	Complete
10	0663210421	O-Ring	1	
11	0663212141	O-Ring	1	
12	—	Restrictor	1	Not sold separately. Ø 7.5 mm (Ø 0.30 in.)