SERVICE KIT

Seal Kit

Numbers match the callouts in the drawing and on the breaker parts diagram.

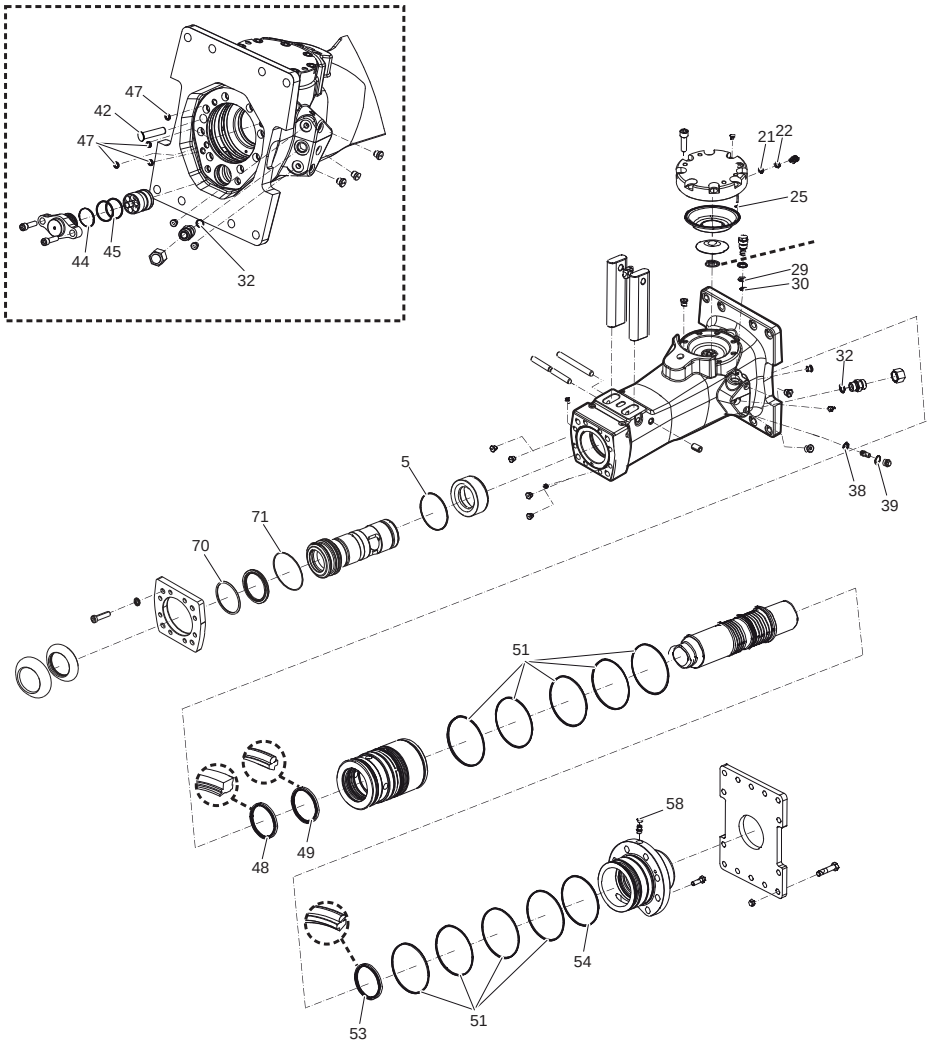

Seal Kit Epiroc part number **3382070103** Crowder SKU EP-3382070103

Kit contents

REF	PART NO.	DESCRIPTION	QTY	NOTES
5	0663714700	O-Ring	1	
21	3115329002	Seal Ring	1	
22	0663212000	O-Ring	1	
25	0663211400	O-Ring	1	
29	0663210421	O-Ring	1	
30	0661200401	Back-Up Ring	1	
32	0664000004	Seal Ring	1	
38	0663210421	O-Ring	1	
39	0663212141	O-Ring	1	
42	3315336700	Plug	1	
43	3315362820	Valve Cover	1	

REF	PART NO.	DESCRIPTION	QTY	NOTES
44	0663211491	O-Ring	1	
45	0663990026	Seal Ring	1	
47	0665090014	Seal Ring	1	
48	0665909964	Wiper	1	
49	0665070147	Piston Rod Seal	1	
51	0663990032	Seal Ring	1	
53	0665070148	Piston Rod Seal	1	
54	0663210417	O-Ring	1	
58	3315280800	Valve Rubber	1	
70	0663210658	O-Ring	1	
71	0663212007	O-Ring	1	