SERVICE DATA

Tightening torques

Ref numbers match the drawing.

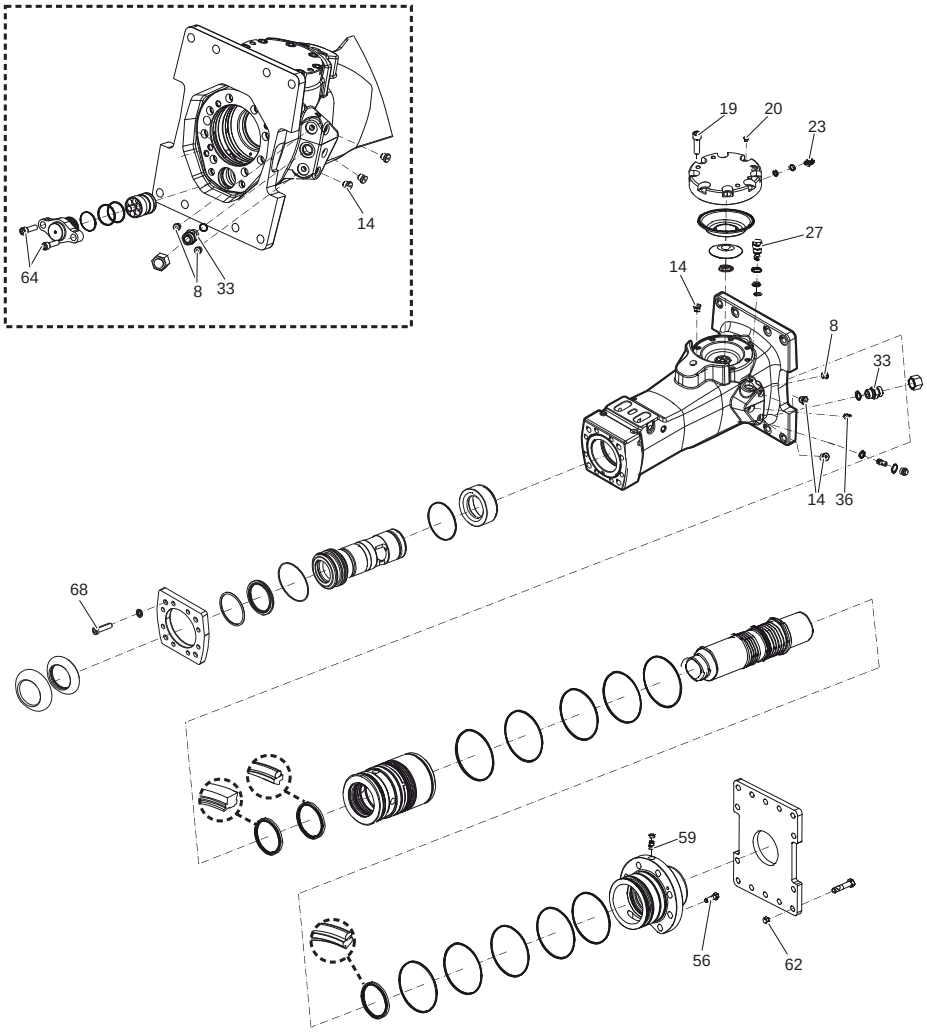

Tightening torques

REF	PART NO.	DESCRIPTION	TORQUE	NOTES
8	0686644207	Plug	30 Nm (22 ft lbf)	LOCTITE® 243™
14	0686371801	Plug	80 Nm (59 ft lbf)	LOCTITE® 243™
19	0211196544	Hex Socket Screw	300 Nm (221 ft lbf)	Molykote®
20	0686371805	Plug	20 Nm (15 ft lbf)	
23	3315366000	Valve	27 Nm (20 ft lbf)	
27	—	Valve	80 Nm (59 ft lbf)	
33	—	Fitting	120 Nm (89 ft lbf)	
36	3360433774	Grease Nipple	30 Nm (22 ft lbf)	
56	0147155503	Screw, Hex Head	315 Nm (232 ft lbf)	Molykote®
59	—	Check Valve	30 Nm (22 ft lbf)	LOCTITE® 243™
62	—	Nut	400 Nm (295 ft lbf)	Molykote®
64	0211110495	Hex Socket Screw	615 Nm (454 ft lbf)	Molykote®
68	0215001042	Hex Socket Screw	240 Nm (177 ft lbf)	