OPTIONAL PARTS

Oversize bushings

Oversize bushings for worn breaker bodies. Standard bushing is ref 2 on the breaker diagram.

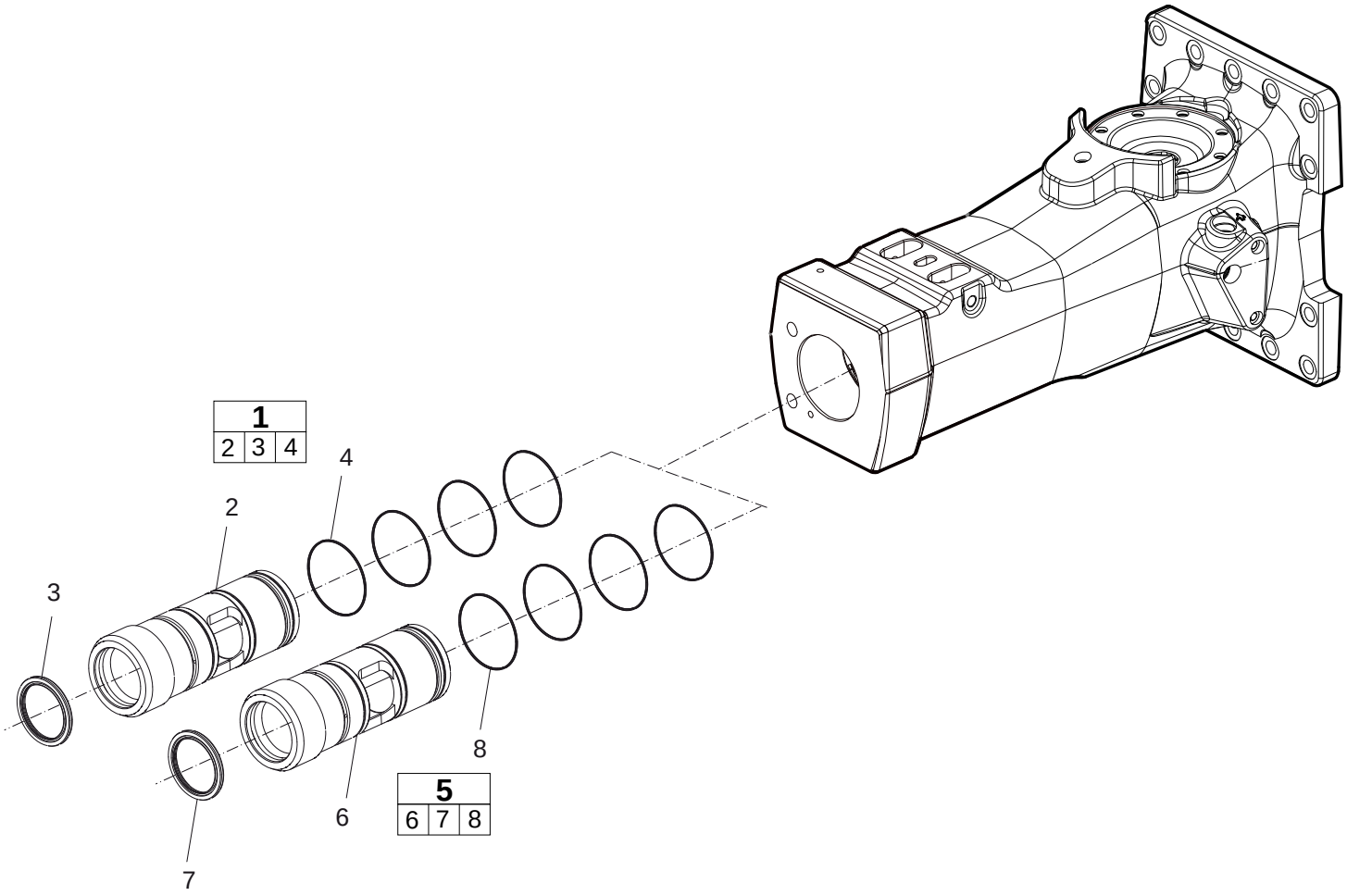

Parts list

REF	PART NO.	DESCRIPTION	QTY	NOTES
1	3315302960	Bushing	1	Complete; includes 2, 3 and 4
2	—	Bushing	1	Not sold separately; part of 1. Ø 135.5 mm (Ø 5.33 in.)
3	3315303000	Scraper Ring	1	
4	0663210823	O-Ring	4	
5	3315302963	Bushing	1	Complete; includes 6, 7 and 8
6	—	Bushing	1	Not sold separately; part of 5. Ø 137 mm (Ø 5.39 in.)
7	3315303000	Scraper Ring	1	
8	0663210823	O-Ring	4	