OPTIONAL PARTS

Restrictors

Alternative restrictor sizes. Standard restrictor is ref 43 on the breaker diagram.

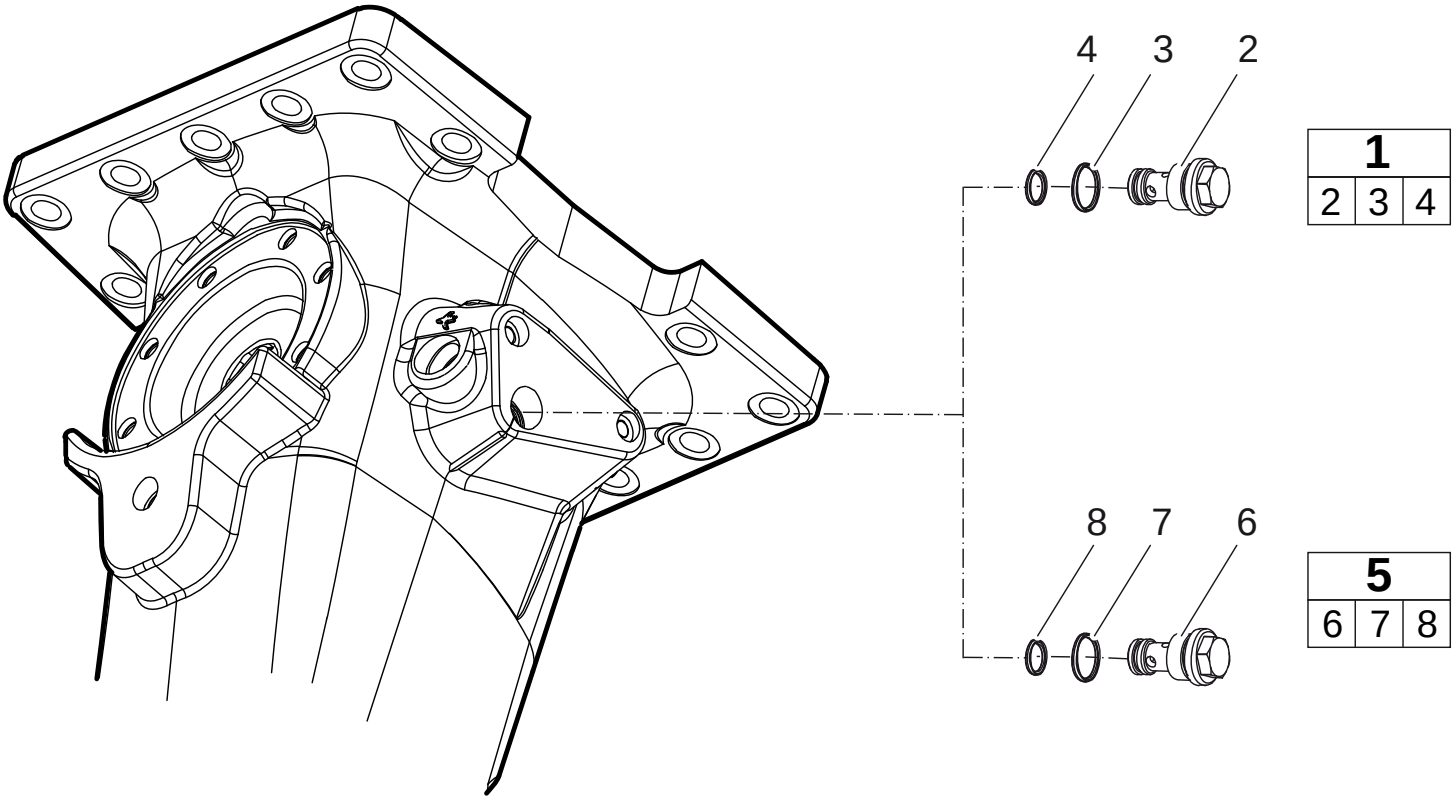

Parts list

REF	PART NO.	DESCRIPTION	QTY	NOTES
1	3315369635	Restrictor	1	Complete; includes 2, 3 and 4
2	—	Restrictor	1	Not sold separately; part of 1. Ø 6.0 mm (Ø 0.24 in.)
3	9125621100	O-Ring	1	
4	0663210421	O-Ring	1	
5	3315369645	Restrictor	1	Complete; includes 6, 7 and 8
6	—	Restrictor	1	Not sold separately; part of 5. Ø 6.7 mm (Ø 0.26 in.)
7	9125621100	O-Ring	1	
8	0663210421	O-Ring	1	