SERVICE KIT

# Seal Kit

Numbers match the callouts in the drawing and on the breaker parts diagram.

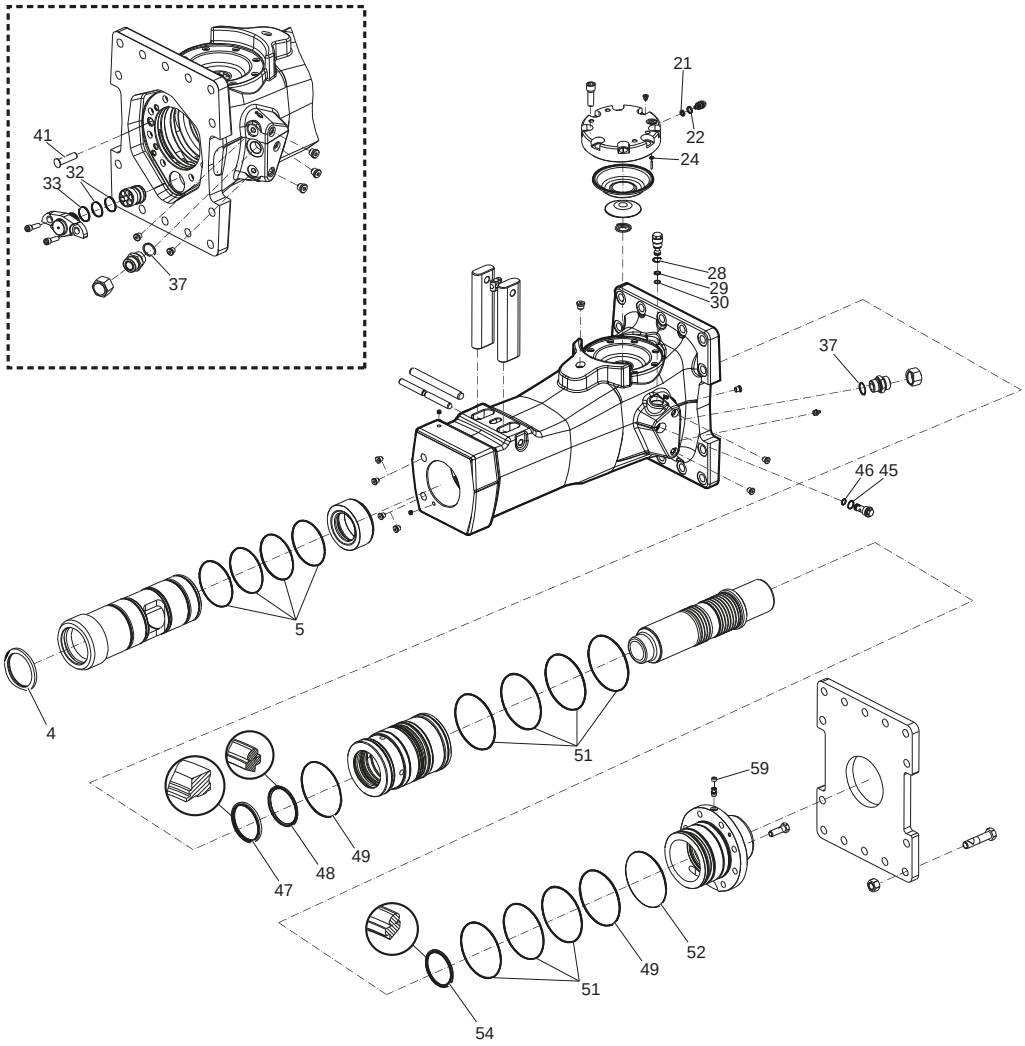


**Seal Kit** Epiroc part number **3315303690** Crowder SKU EP-3315303690

## Kit contents

| REF | PART NO. | DESCRIPTION | QTY | NOTES |
|---|---|---|---|---|
| 4 | 3315303000 | Scraper Ring | 1 | |
| 5 | 0663210823 | O-Ring | 4 | |
| 21 | 3115329002 | Seal Ring | 1 | |
| 22 | 0663212000 | O-Ring | 1 | |
| 24 | 0663211400 | O-Ring | 1 | |
| 28 | 9125621100 | O-Ring | 1 | |
| 29 | 0663210421 | O-Ring | 1 | |
| 30 | 0661200401 | Back-up Ring | 1 | |
| 32 | 0663990026 | Seal Ring | 2 | |
| 33 | 0663211491 | O-Ring | 1 | |
| 37 | 0664000005 | Seal Ring | 1 | |

| REF | PART NO. | DESCRIPTION | QTY | NOTES |
|---|---|---|---|---|
| 41 | 3315336700 | Plug | 1 | |
| 45 | 0663210421 | O-Ring | 1 | |
| 46 | 9125621100 | O-Ring | 1 | |
| 47 | 0665909965 | Wiper | 1 | |
| 48 | 0665070134 | Piston Rod Seal | 1 | |
| 49 | 0663990027 | Seal Ring | 2 | |
| 51 | 0663211303 | O-Ring | 7 | |
| 52 | 0663211506 | O-Ring | 1 | |
| 54 | 0665070133 | Piston Rod Seal | 1 | |
| 59 | 3315280800 | Valve Rubber | 1 | |