WORKING TOOLS

Working tools: ClassicLine

Sizes and weights are shown beside each tool in the drawing.

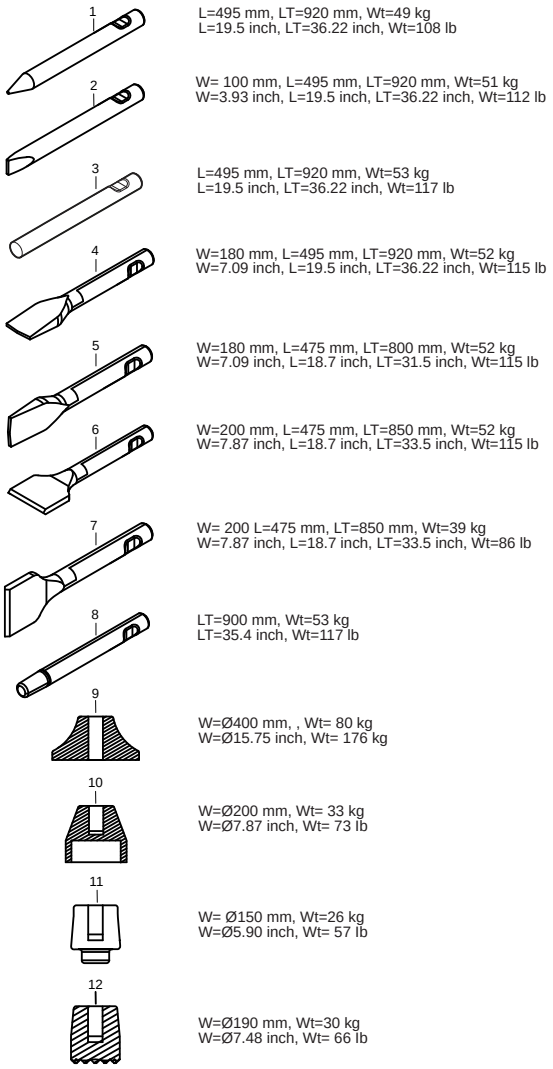

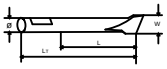

ClassicLine working tools

REF	PART NO.	DESCRIPTION	QTY	NOTES
1	3083340915	Moil Point	1	
2	3083340916	Chisel	1	Cross
3	3083340917	Blunt Tool	1	
4	3083340924	Wide Chisel	1	Cross
5	3083340925	Wide Chisel	1	Parallel
6	3083340942	Asphalt Cutter	1	Cross
7	3083340943	Asphalt Cutter	1	Parallel
8	3315370505	Shaft	1	
9	3315371200	Tamping Pad	1	Square
10	3315372000	Post Driver Pad	1	Round
11	3315372600	Pile Driver Pad	1	Round
12	3315373200	Bushing Pad	1	Round

WORKING TOOLS

Working tools: ProLine

Sizes and weights are shown beside each tool in the drawing.

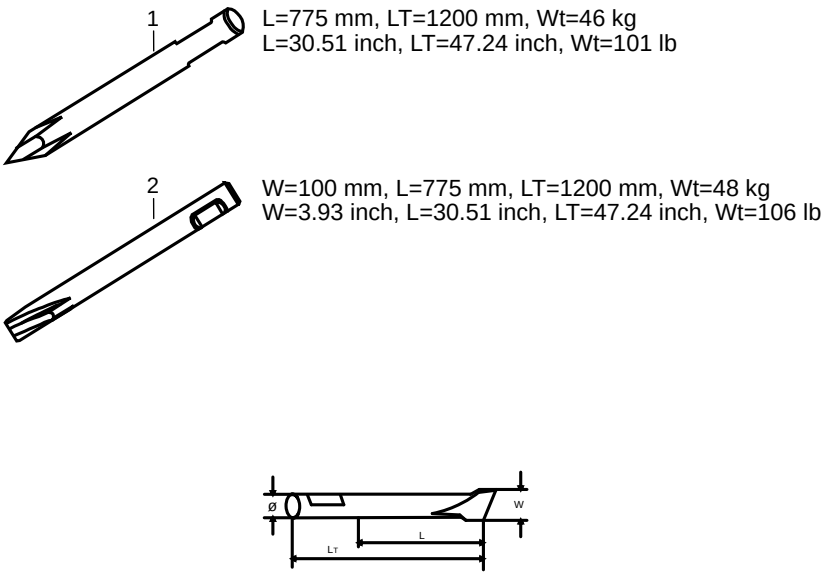

ProLine working tools

REF	PART NO.	DESCRIPTION	QTY	NOTES
1	3363120269	Moil Point	1	X-profile
2	3363120270	Chisel	1	X-profile