SERVICE KIT

Lower Hammer Part Kit

Numbers match the callouts in the drawing and on the breaker parts diagram.

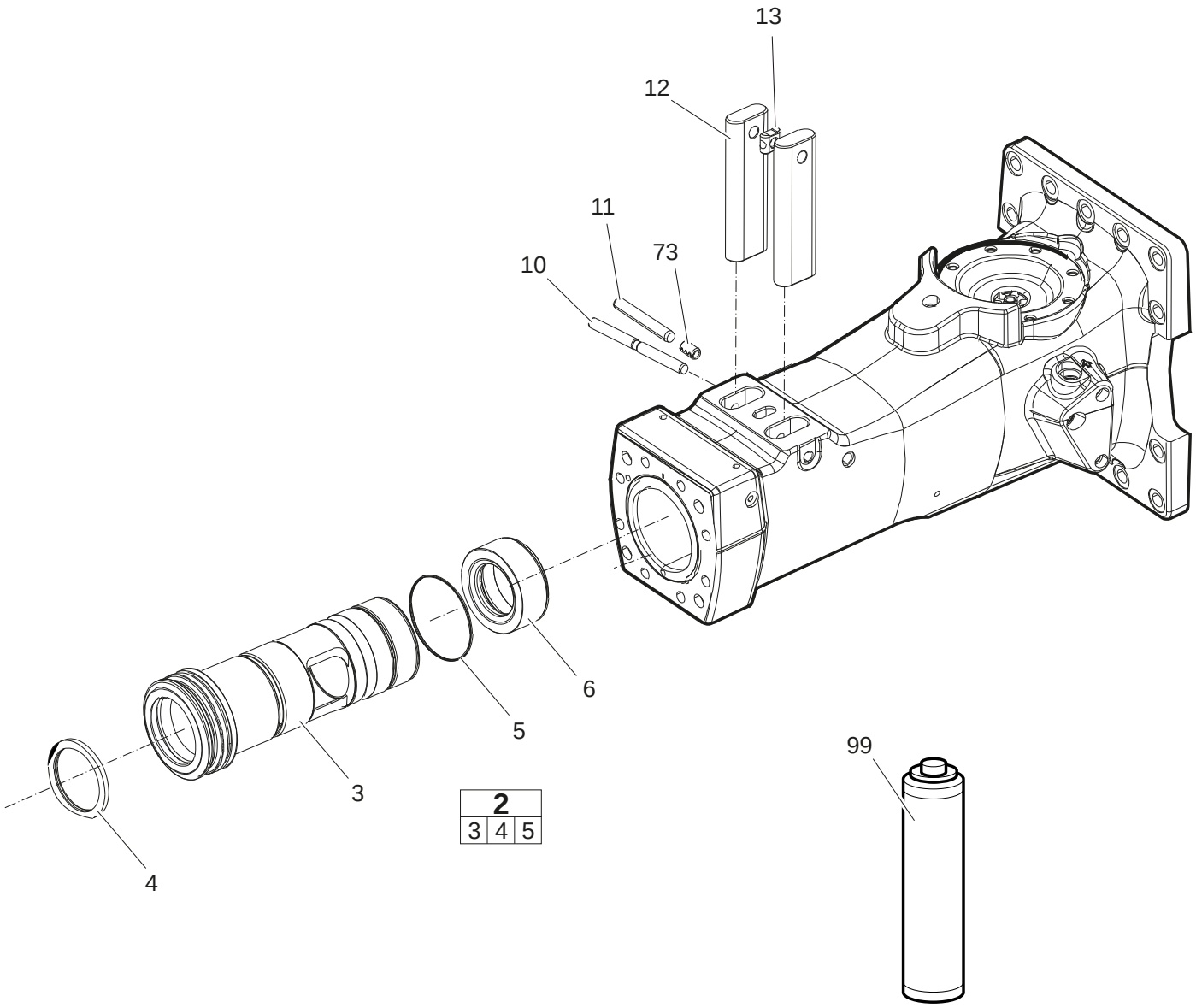

Lower Hammer Part Kit Epiroc part number **3382070199** Crowder SKU EP-3382070199

Kit contents

REF	PART NO.	DESCRIPTION	QTY	NOTES
2	3382070197	Bushing	1	Complete; includes 3, 4 and 5
3	—	Bushing	1	Not sold separately; part of 2
4	3315303000	Scraper Ring	1	
5	0663210823	O-Ring	4	
6	3315302800	Stop Ring	1	
10	3315319110	Lock Pin	1	

REF	PART NO.	DESCRIPTION	QTY	NOTES
11	3315434900	Bushing Pin	1	
12	3315442750	Retainer Bar	1	
13	3315141900	Lock Buffer	1	
73	0108110322	Spring Pin	1	
99	—	Chisel Paste	1	Not sold separately. Bio, cartridge 1 x 400 g (0.88 lbs)